ORDER No. PCZ0709109CE

Service Manual

Colour LCD Television

TX-32LMD70A
TX-32LMD70FA
TX-32LMD71FA
TX-32LMD72FA
TX-26LMD70A
TX-26LMD70FA
TX-26LMD71FA

GLP22M Chassis

Specifications

(Informations in brackets [ ] refers to model 26")

Power Source:	220-240V AC, 50Hz	
Power Consumption	135W [104W]	
Stand-by Power Consumption:	1.0W (TV ONLY) 13W (TV+DVB set to record)	
Aerial Impedance:	75Ω unbalanced, Coaxial Type	
Receiving System:	**LMD70A** PAL-I PAL-525/60 (AV only) DVB (via UHF aerial input) M.NTSC (AV only) NTSC (AV only)	**LMD70FA** PAL-I/H, B/G, D/K SECAM B/G, D/K, L/L' PAL-525/60 (AV only) DVB (via VHF/UHF aerial input) M.NTSC (AV only) NTSC (AV only)
Receiving Channels:	**LMD70A** UHF E21-E68	**LMD70FA** VHF E2-E12 VHF A-H (ITALY) VHF R3-R5 UHF E21-E69 CATV S1-S10 (M1-M10) CATV S21-S41 (Hyperband) VHF H1-H2 (ITALY) VHF R1-R2 VHF R6-R12 CATV (S01-S05) CATV S11-S20 (U1-U10)
Operating Conditions:	Temperature: 0°C ÷ 35°C Humidity: 20% ÷ 80% RH (non condensing)	
Scanning format:	480i(60Hz), 480p(60Hz), 576i(50Hz), 576p(50Hz), 720p(60Hz), 720p(50Hz), 1.080i(60Hz), 1.080i(50Hz), 1.080p(60Hz), 1.080p(50Hz)	
PC signals:	VGA, SVGA, XGA, SXGA(compressed) Horizontal scanning frequency 31 – 69 kHz Vertical scanning frequency 59 – 86 Hz	

Panasonic CS (U.K.) Ltd.
WILLOUGHBY ROAD,
BRACKNELL,
BERKS.,
RG12 8FT.

Panasonic

Intermediate Frequency:

Video/Audio	**LMD70A**	**LMD70FA**
Video	38,9MHz	38,9MHz, 33,9MHz
Audio	32.90MHz 32.35MHz(NICAM)	33,4MHz (B/G), 33,16MHz (A2) 33,05MHz (NICAM B/G, D/K, L') 32,4MHz (D/K), 32,66MHz (CZ STEREO) 40,4MHz (L'), 39,75MHz (L' NICAM)
Colour	34,47MHz	34,47MHz (PAL) 34,5MHz, 34,65MHz (SECAM) 38,3MHz, 38,15MHz (SECAM L')

Terminals:

AV1 IN	Video (21 pin) 1V p-p 75Ω Audio (21 pin) 500mV rms 10kΩ RGB (21 pin) 0,7V p-p 75Ω
AV1 OUT	Video (21 pin) 1V p-p 75Ω Audio (21 pin) 500mV rms 1kΩ
AV2 IN	Video (21 pin) 1V p-p 75Ω Audio (21 pin) 500mV rms 10kΩ RGB (21 pin) 0,7V p-p 75Ω S-video IN (21-pin) Y: 1V p-p 75Ω C:0,3V p-p 75Ω
AV2 OUT	Video (21 pin) 1V p-p 75Ω Audio (21 pin) 500mV rms 1kΩ
AV3 IN	S-Video IN (4-pin) Y: 1V p-p 75Ω C:0,286V p-p 75Ω Audio (RCAx2) 500mV rms 10kΩ Video (RCAx1) 1V p-p 75Ω
HDMI1, HDMI2	Type A Connector
COMPONENT	Video (RCAx3) Y:1V p-p 75Ω (including synchronization) Pb, Pr: ±0,35V p-p 75Ω
AUDIO IN	Audio (RCAx2) 500mV rms 10kΩ (for YUV; HDMI1)
AUDIO OUT	Audio (RCAx2) 500mV rms 1kΩ (high Impedance)
PC	HIGH-DENSITY D_SUB 15PIN R,G,B: 700mV p-p 75Ω HD,VD:TTL Level 2-5V p-p (high impedance)
LCD screen:	L5EDD8Q00037 [L5EDD6Q00026] 1366 x 768 XGA, 16:9 Visible Diagonal 800mm [660mm]
Audio Output:	20W (2x10W)
Headphones:	3,5mm (M3), 8Ω Impedance
Accessories supplied :	Remote Control 2 x R6 (UM3) Batteries

Dimensions:

	Height:	Width:	Depth:
Including TV stand	615mm [525mm]	791mm [657mm]	248mm [216mm]
TV set only	563mm [473mm]	791mm [657mm]	117mm [117mm]]
Net weight:	17,5kg	[14kg]	

Specifications are subject to change without notice.
Weights and dimensions shown are approximate.

⚠ Warning

This service information is designed for experienced repair technicians only and is not designed for use by the general public. It does not contain warnings or cautions to advise non-technical individuals of potencial dangers in attempting to service a product. Products powered by electricity should be serviced or repaired only by experienced professional technicians. Any attempt to service or repair the product or products deal within this service information by anyone else could result in serious injury or death.

CONTENTS

SAFETY PRECAUTIONS 4
GENERAL GUIDE LINES..... 4
TOUCH – CURRENT CHECK..... 4
PREVENTION OF ELECTROSTATIC DISCHARGE (ESD)
TO ELECTROSTATICALLY SENSITIVE (ES) DEVICES 5
ABOUT LEAD FREE SOLDER (PBF)..... 6
SUGGESTED PB FREE SOLDER..... 6
APPLICABLE SIGNALS..... 7
SERVICE HINTS 8
CHASSIS BOARD LAYOUT 9
LOCATION OF LEAD WIRING……9
SETTING INSPECTION..... 10
SELF-CHECK 11
POWER LED BLINKING TIMING CHART 12
SERVICE MODE FUNCTION 13
SERVICE 14
OPTION DESCRIPTION..... 15
ADJUSTMENT METHOD 16
WIRING DIAGRAM..... 17
BLOCK DIAGRAMS..... 18
PARTS LOCATION..... 21
REPLACEMENT PARTS LIST..... 23
SCHEMATIC DIAGRAMS..... 43
P-BOARD (1 OF 2) SCHEMATIC DIAGRAM 44
DG-BOARD (1 OF 17) SCHEMATIC DIAGRAM 46
G-BOARD SCHEMATIC DIAGRAM..... 63
V-BOARD SCHEMATIC DIAGRAM 64
CONDUCTOR VIEWS 65

Safety Precautions

General Guide Lines

1. When servicing, observe the original lead dress. If a short circuit is found, replace all parts which have been overheated or damaged by the short circuit.
2. After servicing, see to it that all the protective devices such as insulation barriers, insulation papers shields are properly installed.
3. After servicing, make the following touch current checks to prevent the customer from being exposed to shock hazards.
4. Always ensure panel TKP0E16001 is correctly replaced before returning to customer (see Fig.1).

Fig. 1

Touch-Current Check

1. Plug the AC cord directly into the AC outlet. Do not use an isolation transformer for this check.
2. Connect a measuring network for touch currents between each exposed metallic part on the set and a good earth ground such as a water pipe, as shown in Fig. 2.
3. Use Leakage Current Tester (Simpson 228 or equivalent) to measure the potential across the measuring network.
4. Check each exposed metallic part, and measure the voltage at each point.
5. Reserve the AC plug in the AC outlet and repeat each of the above measure.
6. The potential at any point (TOUCH CURRENT) expressed as voltage U1 and U2, does not exceed the following values:
   For a. c.: U1 = 35 V (peak) and U2 = 0.35 V (peak);
   For d. c.: U1 = 1.0 V,
   Note:
   The limit value of U2 = 0.35 V (peak) for a. c. and U1 = 1.0 V for d. c. correspond to the values 0.7 mA (peak) a. c. and 2.0 mA d. c.
   The limit value U1 = 35 V (peak) for a. c. correspond to the value 70 mA (peak) a. c. for frequencies greater than 100 kHz.
7. In case a measurement is out of the limits specified, there is a possibility of a shock hazard, and the equipment should be repaired and rechecked before it is returned to the customer.

Measuring network for TOUCH CURRENTS

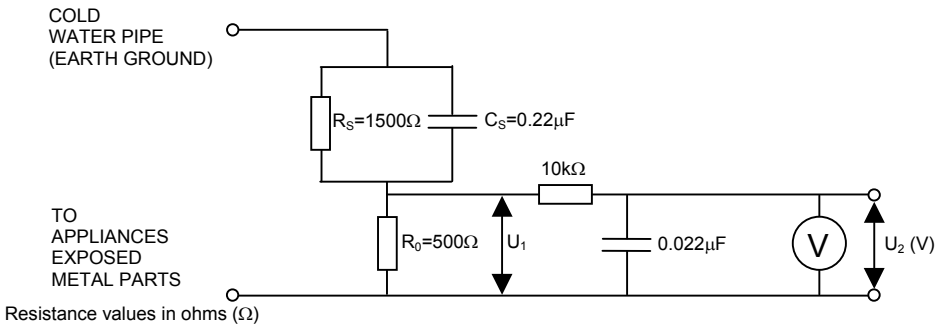

Resistance values in ohms (Ω)

V: Voltmetr or oscilloscope (r.m.s. or peak reading)

Input resistance: ≥ 1MΩ
Input capacitance: ≤ 200pF
Frequency range: 15Hz to 1MHz and d.c.respectively

NOTE – Appropriate measures should be taken to obtain the correct value in case of non-sinusoidal waveforms

Fig. 2

Prevention of Electrostatic Discharge (ESD) to Electrostatically Sensitive (ES) Devices

Some semiconductor (solid state) devices can be damaged easily by static electricity. Such components commonly are called Electrostatically Sensitive (ES) Devices. Examples of typical ES devices are integrated circuits and some field-effect transistors and semiconductor "chip" components. The following techniques should be used to help reduce the incidence of component damage caused by electrostatic discharge (ESD).

1. Immediately before handling any semiconductor component or semiconductor-equipped assembly, drain off any ESD on your body by touching a known earth ground. Alternatively, obtain and wear a commercially available discharging ESD wrist strap, which should be removed for potential shock reasons prior to applying power to the unit under test.
2. After removing an electrical assembly equipped with ES devices, place the assembly on a conductive surface such as aluminum foil, to prevent electrostatic charge build up or exposure of the assembly.
3. Use only a grounded-tip soldering iron to solder or unsolder ES devices.
4. Use only an anti-static solder removal device. Some solder removal devices not classified as "anti-static (ESD protected)" can generate electrical charge sufficient to damage ES devices.
5. Do not use freon-propelled chemicals. These can generate electrical charges sufficient to damage ES devices.
6. Do not remove a replacement ES device from its protective package until immediately before you are ready to install it. (Most replacement ES devices are packaged with leads electrically shorted together by conductive foam, aluminum foil or comparable conductive material).
7. Immediately before removing the protective material from the leads of a replacement ES device, touch the protective material to the chassis or circuit assembly into which the device will be installed.
   Caution
   Be sure no power is applied to the chassis or circuit, and observe all other safety precautions.

8. Minimize bodily motions when handling unpackaged replacement ES devices. (Otherwise harmless motion such as the brushing together of your clothes fabric or the lifting of your foot from a carpeted floor can generate static electricity (ESD) sufficient to damage an ES device).

IMPORTANT SAFETY NOTICE

There are special components used in this equipment which are important for safety.
These parts are marked by ⚠ in schematic diagrams, exploded views and replacement parts list. It is essential that these critical parts should be replaced with manufacturer's specified parts to prevent shock, fire, or other hazards. Do not modify the original design without permission of manufacturer.

About lead free solder (PbF)

Note: Lead is listed as (Pb) in the periodic table of elements.
In the information below, Pb will refer to Lead solder, and PbF will refer to Lead Free Solder.
The Lead Free Solder used in our manufacturing process and discussed below is (Sn+Ag+Cu).
That is Tin (Sn), Silver (Ag) and Copper (Cu) although other types are available.

This model uses Pb Free solder in it's manufacture due to environmental conservation issues. For service and repair work, we'd suggest the use of Pb free solder as well, although Pb solder may be used.
PCBs manufactured using lead free solder will have the PbF within a leaf Symbol

PbF stamped on the back of PCB.

Caution

- Pb free solder has a higher melting point than standard solder. Typically the melting point is 50 ~ 70 °F (30~40°C) higher. Please use a high temperature soldering iron and set it to 700 ± 20 °F (370 ± 10 °C).
- Pb free solder will tend to splash when heated too high (about 1100 °F or 600 °C).
  If you must use Pb solder, please completely remove all of the Pb free solder on the pins or solder area before applying Pb solder. If this is not practical, be sure to heat the Pb free solder until it melts, before applying Pb solder.
- After applying PbF solder to double layered boards, please check the component side for excess solder which may flow onto the opposite side. (see Fig.3)

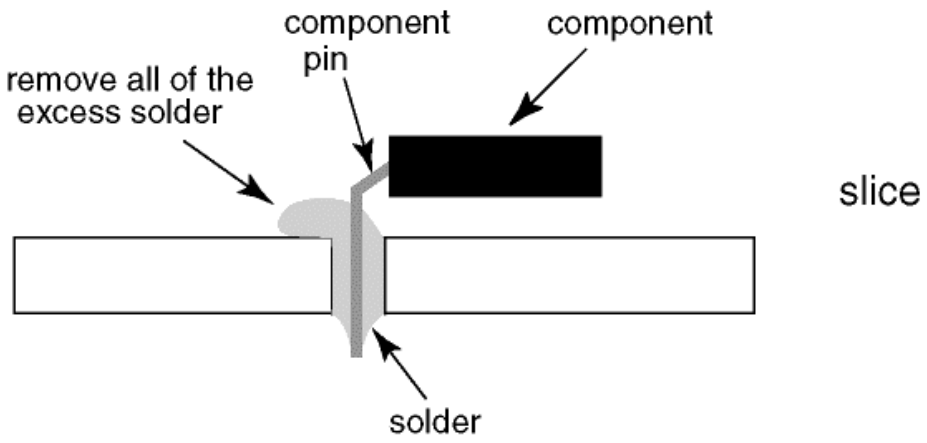

Fig.3

Suggested Pb free solder

There are several kinds of Pb free solder available for purchase. This product uses Sn+Ag+Cu (tin, silver, copper) solder. However, Sn+Cu (tin, copper), Sn+Zn+Bi (tin, zinc, bismuth) solder can also be used. (see Fig.4)

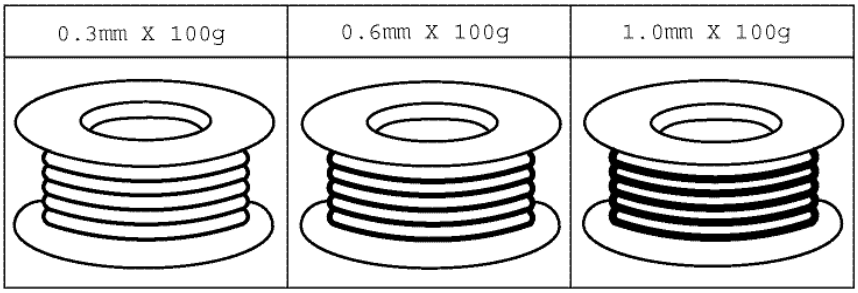

Fig.4

Applicable signals

Component (Y, Pb, Pr), **HDMI**

Signal name	COMPONENT	HDMI
525 (480) / 60i	*	*
525 (480) / 60p	*	*
625 (576) / 50i	*	*
625 (576) / 50p	*	*
750 (720) / 60p	*	*
750 (720) / 50p	*	*
1,125 (1,080) / 60i	*	*
1,125 (1,080) / 50i	*	*
1,125 (1,080) / 60p		*
1,125 (1,080) / 50p		*

PC (D-sub 15P)

Signal name	Horizontal frequency (kHz)	Vertical frequency (Hz)
640 × 400 @70 Hz	31.47	70.07
640 × 480 @60 Hz	31.47	59.94
640 × 480 @75 Hz	37.50	75.00
800 × 600 @60 Hz	37.88	60.32
800 × 600 @75 Hz	46.88	75.00
800 × 600 @85 Hz	53.67	85.06
852 × 480 @60Hz	31.44	59.89
1,024 × 768 @60Hz	48.36	60.00
1,024 × 768 @70Hz	56.48	70.07
1,024 × 768 @75Hz	60.02	75.03
1,024 × 768 @85Hz	68.68	85.00
1,280 × 1,024 @60Hz	63.98	60.02
1,366 × 768 @60Hz	48.39	60.04
Macintosh 13“ (640 × 480)	35.00	66.67
Macintosh 16“ (832 × 624)	49.73	74.55
Macintosh 21“ (1,152 × 870)	68.68	75.06

Note:

- Signals other than above may not be displayed properly.
- The above signals are reformatted for optimal viewing on your display.
- Applicable input signal for PC is basically compatible to VESA standard timing.
- PC signal is magnified or compressed for display, so that it may not be possible to show fine detail with sufficient clarity.

Service Hints

How to remove the backcover

Remove the 18[16] fixing screws. (see Fig.5)

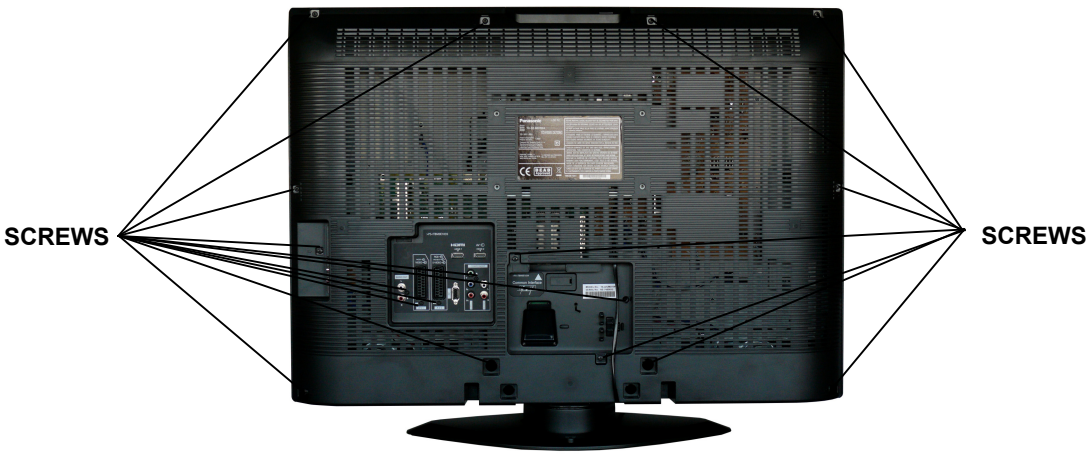

Fig.5

How to remove the Pedestal assembly

Lay the main unit face down. (see Fig.6)

Fig.6

Remove the 4 fixing screws and the pedestal assembly. (see Fig.7)

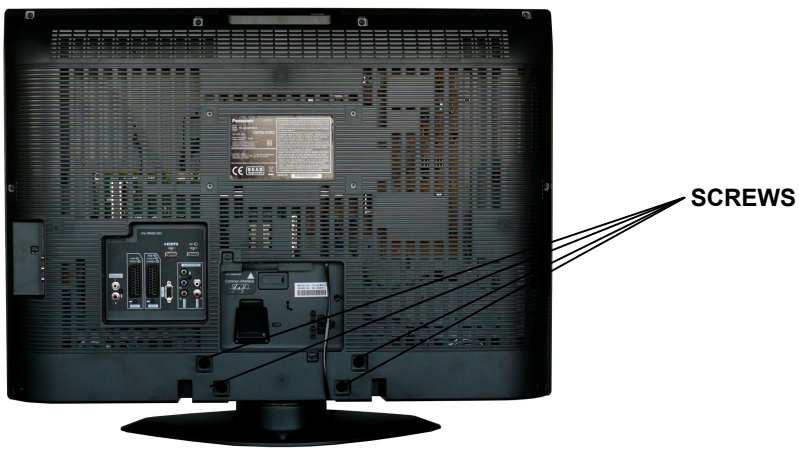

Fig.7

Chassis Board Layout

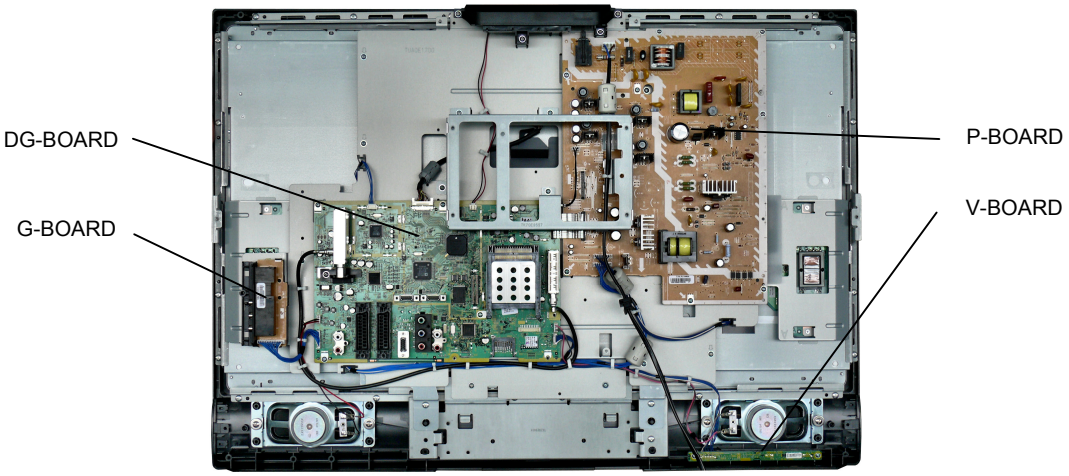

Board Name	Function
DG-Board	Global Core, HDMI, IDTV Processor, D/A Converter, AV Connector, Analog tuner, Digital tuner, AV Switch
G-Board	Side AV Connector
P-Board	Main Input, Power Supply, Main Switch
V-Board	Remote Receiver, LED IR, Cats

Location of Lead Wiring

To find the Part Number of required wire in Replacement Parts List click on the wire name in red box.

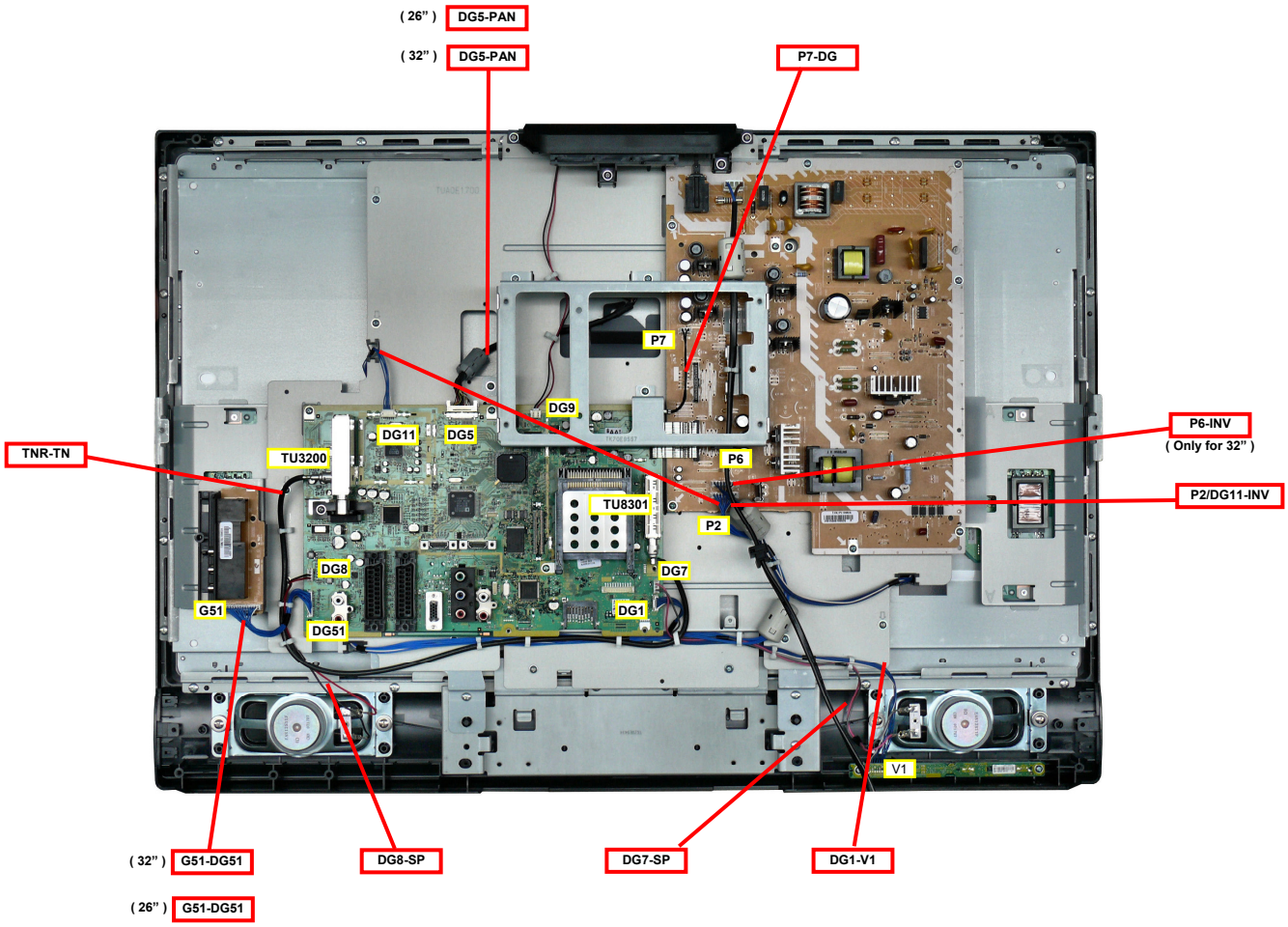

Setting Inspection
Voltage Confirmation

Confirm the following voltages:

P board

Description	Test point	Position	Normal mode	Stand by mode	Active stand by mode
Sub_5V	TP861	P4, pin 12,13	5,0V +/- 0,25V	<1V	5,0V +/- 0,25V
Panel 5/12V	TP857	P4, pin 22,23	12V +/- 1V	<1V	<1V
15V_Audio	TP856	C3861	15,5V +/- 1V	<1V	<1V
9V_Header	TP864	P4, pin 7,6	9V +/- 0,25V	<1V	9,0V +/- 0,25V
STBY_5V	TP863	P4, pin 16	5,0V +/- 0,25V	5,0 +/- 0,25V	5,0V +/- 0,25V
24V_INV	TP853	P2, pin1,2,3,4	24V +/- 1,5V	<1V	<1V
24V_INV	TP852	C865	24V +/- 1,5V	24V +/- 1,5	24V +/- 1,5V

DG board

DTV9V	TP5700	9V +/- 0,25V
SUB5V	TP5701	5V +/- 0,25V
SUB3,3V	TP5600	3,3V +/- 0,25V
MAIN9V	TP5706	9V +/- 0,25V
STB5V	TP5702	5V +/- 0,25V
SOUND15V	TPS15	15V +/- 0,25V

Self Check

Self-check is used to automatically check the bus lines and hexadecimal code of the TV set. To enter Self-Check mode, keep pressing the down **(-/v)** button on the TV set and press the **STATUS** [*i*] button on the remote control. To exit Self Check, switch off the TV set at the power button.

TX-26LMD70FA
TX-26LMD71FA

```
26                    Panasonic 2007LCD                    26lmd70a.dat:000001
                      Self  Check Complete

ADV     O.K.      PEAKS-SOFT        6.570      SUM              189f
VSW     O.K.      PEAKS-EEP      02.06.0035
ADAV    O.K.      GenX-SOFT         1.00.00    OPTION 1           0c
ASW     O.K.      GenX-EEP          1.02.00    OPTION 2           ea
GENX    O.K.      GenX-ROMCORR      1.01.00    OPTION 3           7f
MEM1    O.K.                                   CHECK              75
MEM2    O.K.                                   MODEL ID           04
TUN1    O.K.                                              03150000
D-TUN   O.K.                                              00000002
OFDM    O.K.
```

TX-32LMD70FA
TX-32LMD71FA
TX-32LMD72FA

```
32                    Panasonic 2007LCD                    32lmd70a.dat:000002
                      Self  Check Complete

ADV     O.K.      PEAKS-SOFT        6.570      SUM              189e
VSW     O.K.      PEAKS-EEP      02.06.0034
ADAV    O.K.      GenX-SOFT         1.00.00    OPTION 1           0c
ASW     O.K.      GenX-EEP          1.02.00    OPTION 2           ea
GENX    O.K.      GenX-ROMCORR      1.01.00    OPTION 3           7f
MEM1    O.K.                                   CHECK              75
MEM2    O.K.                                   MODEL ID           04
TUN1    O.K.                                              03150000
D-TUN   O.K.                                              00000004
OFDM    O.K.
```

TX-26LMD70A

```
26                    Panasonic 2007LCD                    26lmd70a.dat:000001
                      Self  Check Complete

ADV     O.K.      PEAKS-SOFT        5.570      SUM              18c3
VSW     O.K.      PEAKS-EEP      01.06.0039
ADAV    O.K.      GenX-SOFT         1.00.00    OPTION 1           2c
ASW     O.K.      GenX-EEP          1.02.00    OPTION 2           ea
GENX    O.K.      GenX-ROMCORR      1.01.00    OPTION 3           7f
MEM1    O.K.                                   CHECK              95
MEM2    O.K.                                   MODEL ID           04
TUN1    O.K.                                              03130000
D-TUN   O.K.                                              00000002
OFDM    O.K.
```

TX-32LMD70A

```
32                    Panasonic 2007LCD                    32lmd70a.dat:000002
                      Self  Check Complete

ADV     O.K.      PEAKS-SOFT        5.570      SUM              18c2
VSW     O.K.      PEAKS-EEP      01.06.0038
ADAV    O.K.      GenX-SOFT         1.00.00    OPTION 1           2c
ASW     O.K.      GenX-EEP          1.02.00    OPTION 2           ea
GENX    O.K.      GenX-ROMCORR      1.01.00    OPTION 3           7f
MEM1    O.K.                                   CHECK              95
MEM2    O.K.                                   MODEL ID           04
TUN1    O.K.                                              0313000
D-TUN   O.K.                                              0000004
OFDM    O.K.
```

Display	Ref. No.	Description	P.C.B.
ADV	IC4510	A/D CONVERTER	DG-Board
VSW	IC3001	VIDEO SWITCH	DG-Board
ADAV	IC2106	AUDIO PROCESSOR	DG-Board
ASW	IC3101	AUDIO SWITCH	DG-Board
TUN1	TU3200	ANALOG TUNER	DG-Board
GENX	IC1100	MICROPROCESSOR	DG-Board
MEM1	IC1101	EEPROM	DG-Board
MEM2	IC8601	EEPROM	DG-Board
D-TUN	TU8301	DIGITAL TUNER	DG-Board
OFDM	IC8301	COFDM DEMODULATOR	DG-Board

If the CCU ports have been checked and found to be incorrect or not located then " - - " will appear in place of "O.K.".

Power LED blinking timing chart

1. Subject
   Information of LED Flashing timing chart.

2. Contents
   When abnormality has occurred the unit, the protection circuit operates and reset to the stand by mode. At this time, the defective block can be identified by number of blinking of the Power LED on the front panel of the unit.

Blinking times	Blinking timing	Contents	Check point
1	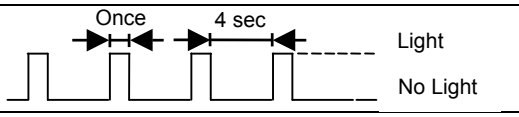	INVERTER_SOS	LCD PANEL DG BOARD
2		FAN_SOS	DG BOARD
3		SOS	DG BOARD P BOARD
4	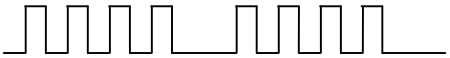	DTV_9V	DG BOARD
5	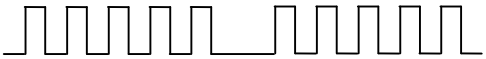	MAIN_9V	DG BOARD
6		SUB_5V	DG BOARD V BOARD
7		MAIN_5V	DG BOARD
8		MAIN_3.3V	DG BOARD
9		SOUND_SOS	DG BOARD
10		HQ1L_SOS	DG BOARD

Service Mode Function

MPU controls the functions switching for each IICs through IIC bus in this chassis. The following setting and adjustment can be adjusted by remote control in Service Menu

How to enter SERVICE

While pressing **(-/v)** button on TV unit, press **0** on the remote control for 3 times within 2 seconds.

Note:

To exit from Service mode, press the exit button on remote control.

SERVICE

Key Command

- Press the **3/4** button to change the adjustment values or function.
- Press the **1/2** button to step up/down through the functions and adjustments
- Press the numerical button **VOLUME (+/-)** to change option item.
- Press the **OK** button after each adjustment has been made to store the required values.

Option Bytes Description

OPTION1			
	0	ATP Speed	Slow (1) / Fast (0)
	1	TXT Ch	On (1) / Off (0)
	2	ID-1	On (1) / Off (0)
	3	Macrovision Auto Evaluation	On (1) / Off (0)
	4	SRS Surround	On (1) / Off (0)
	5	Teletext Top	Off (1) / On (0)
	6	Not Use	Not Use
	7	Not Use	Not Use
OPTION2			
	0	Not Use	Not Use
	1	A2 Stereo (5,5MHz)	On (1) / Off (0)
	2	A2 Stereo (6,0MHz)	On (1) / Off (0)
	3	A2 Stereo (6,5MHz)	On (1) / Off (0)
	4	Not Use	Not Use
	5	NICAM (5,5MHz)	On (1) / Off (0)
	6	NICAM (6,0MHz)	On (1) / Off (0)
	7	NICAM (6,5MHz)	On (1) / Off (0)
OPTION3			
	0	NICAM priority (ASIA/M.E)	On (1) / Off (0)
	1	NICAM priority (K/UK)	On (1) / Off (0)
	2	NICAM priority (China)	On (1) / Off (0)
	3	NICAM priority (NZ/INDN)	On (1) / Off (0)
	4	NICAM priority (AUS)	On (1) / Off (0)
	5	NICAM priority (E.Europe)	On (1) / Off (0)
	6	NICAM priority (Special)	On (1) / Off (0)
	7	Not Use	Not Use

Adjustment Method

Sub-Contrast/White Balance Adjustment

Instrument Name	Connect to	Remarks
1. Remote controller 2. LCD WB meter (Minolta CS-1000A equivalent) 3. Comunication jig 4. Computer for external control		Correlation can be also taken by CA-210 or equivalent

Procedure	Remarks
	Let the panel standfor more than 3 hours at more than 20 °C. Basically perform adjustment in the ambient environment of room temperature more than 20 °C. The aging time is more than20 min at above room temperature. Applied signal
Subcontrast adjustment 1. Receive PAL colour bar (100% white) RF signal. 2. Enter "Contrast" adj. In SERVICE mode. 3. Start adjusting by using Yellow Key. 4. If the adjustment finished normally, the letter of Contrast will change from red to black	100% full colour bar 0,7V p-p white peak 87.5% modulation
White Balance adjustment 1. Procedure basically performs checking using the production software and make automatic adjustment using external computer. 2. It adjusts in the mode of : Colour balance Normal as follows. Viewing Mode Dynamic	
32LMD70A WHITE Normal x: 0,2860 ± 0,010 y: 0,3090 ± 0,010 GRAY Normal x: 0,2860 ± 0,010 y: 0,3120 ± 0,010	32LMD70FA WHITE Normal x: 0,2860 ± 0,010 y: 0,2960 ± 0,010 GRAY Normal x: 0,2860 ± 0,010 y: 0,3020 ± 0,010
	100% WHITE 50% GRAY
26LMD70A WHITE Normal x: 0,2860 ± 0,010 y: 0,3060 ± 0,010 GRAY Normal x: 0,2860 ± 0,010 y: 0,3090 ± 0,010	26LMD70FA WHITE Normal x: 0,2820 ± 0,010 y: 0,2880 ± 0,010 GRAY Normal x: 0,2820 ± 0,010 y: 0,2880 ± 0,010
	100% WHITE 50% GRAY

Wiring diagram

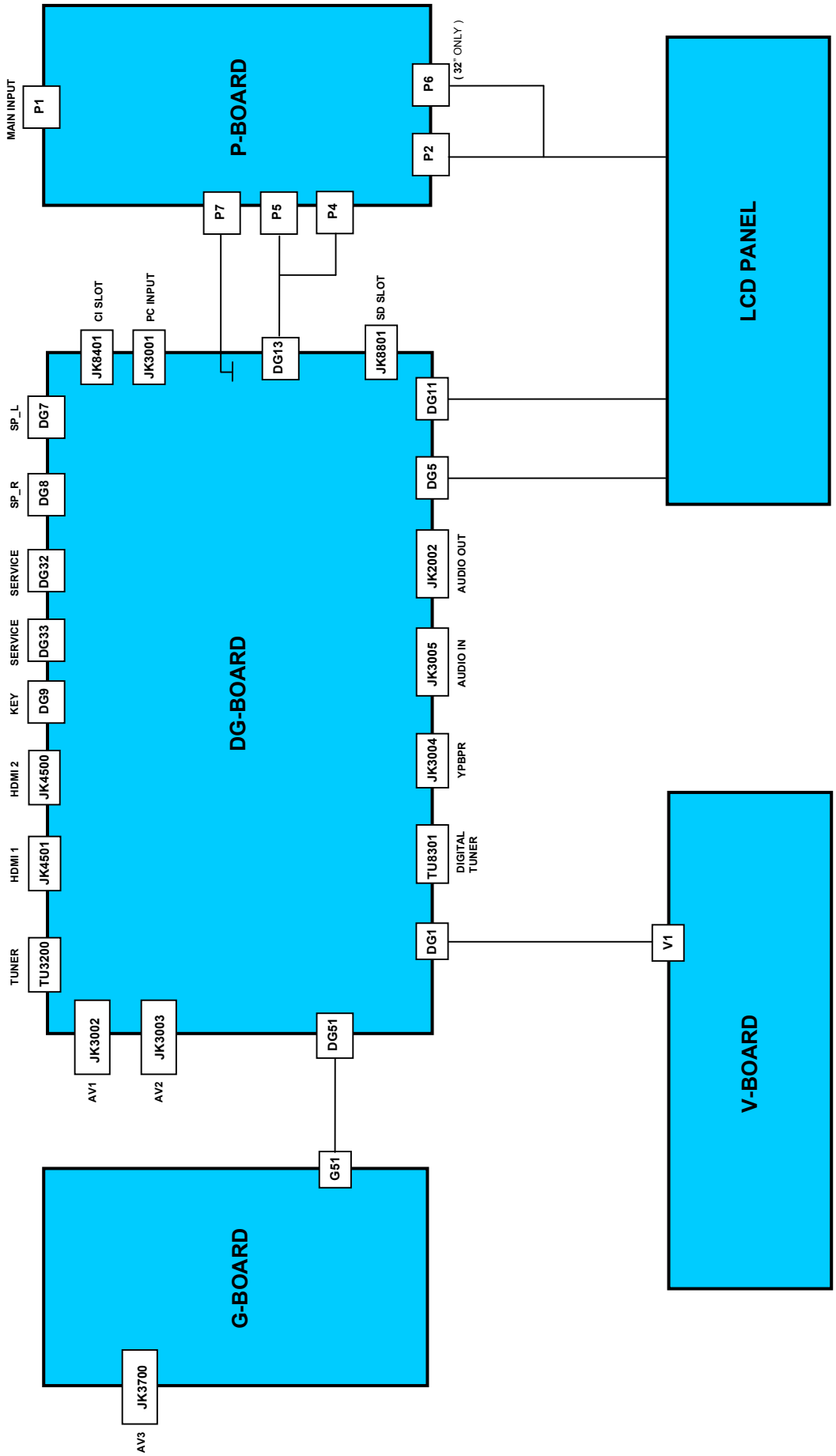

VIDEO & STEREO AUDIO BLOCK DIAGRAM

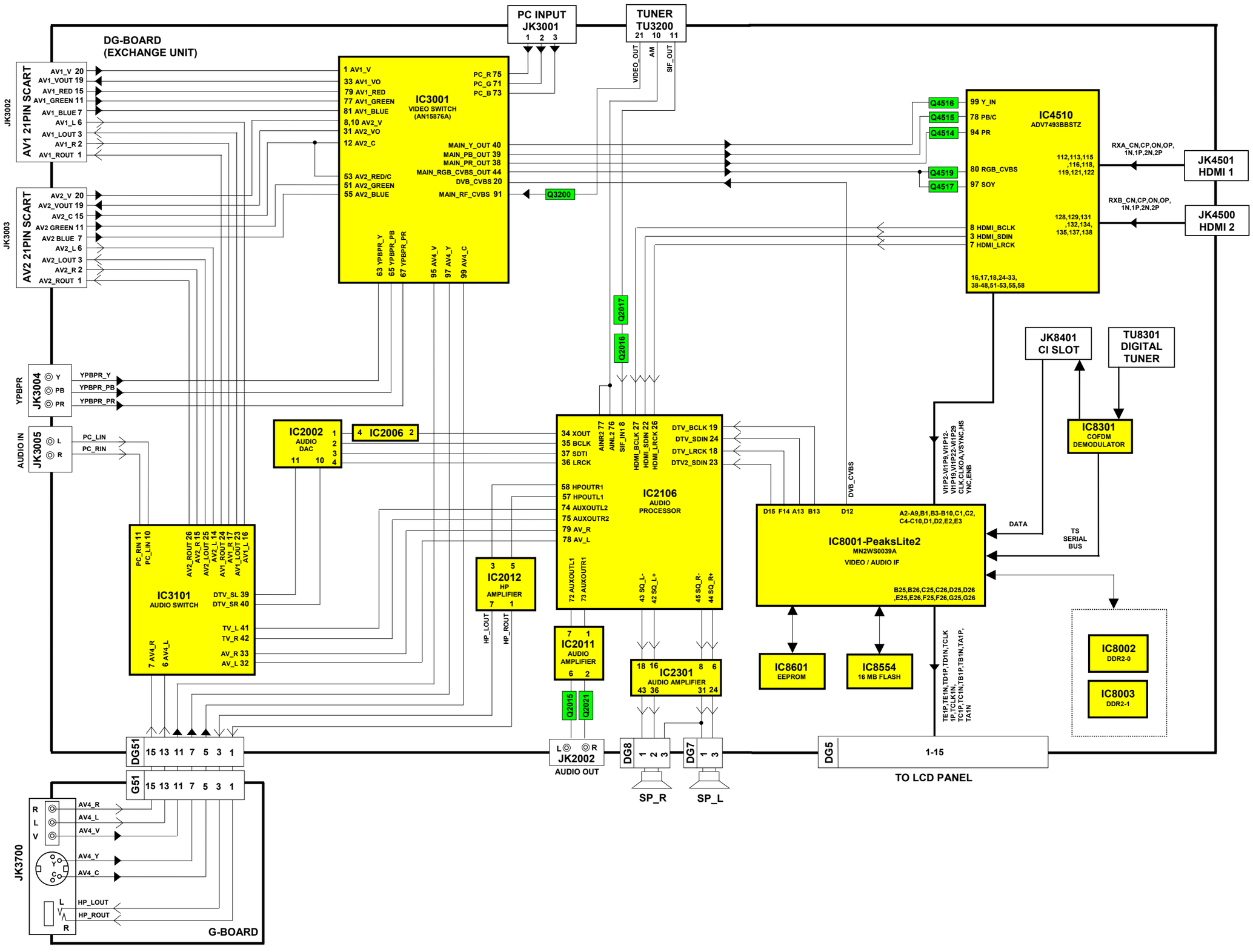

POWER SUPPLY BLOCK DIAGRAM

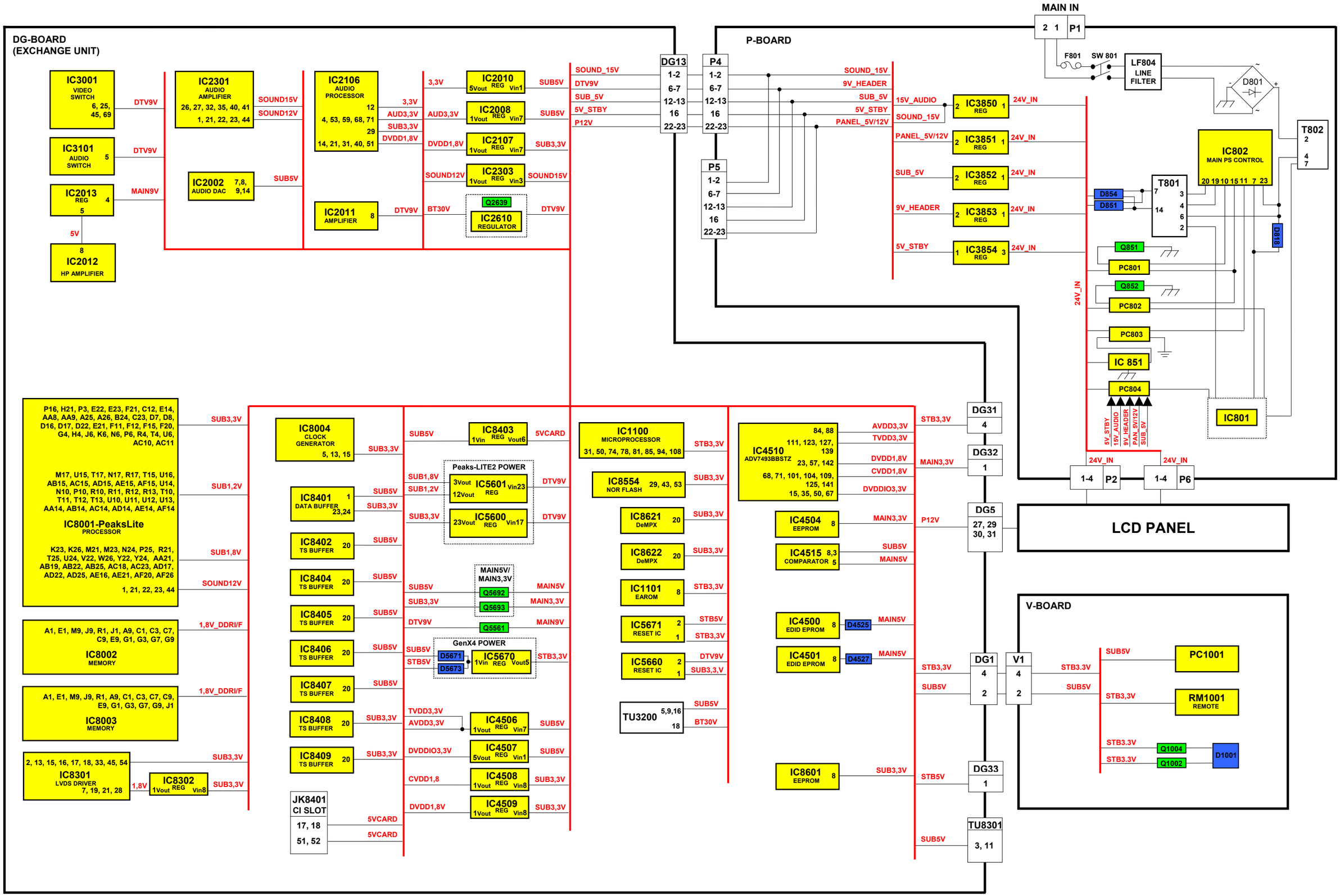

CONTROL BLOCK DIAGRAM

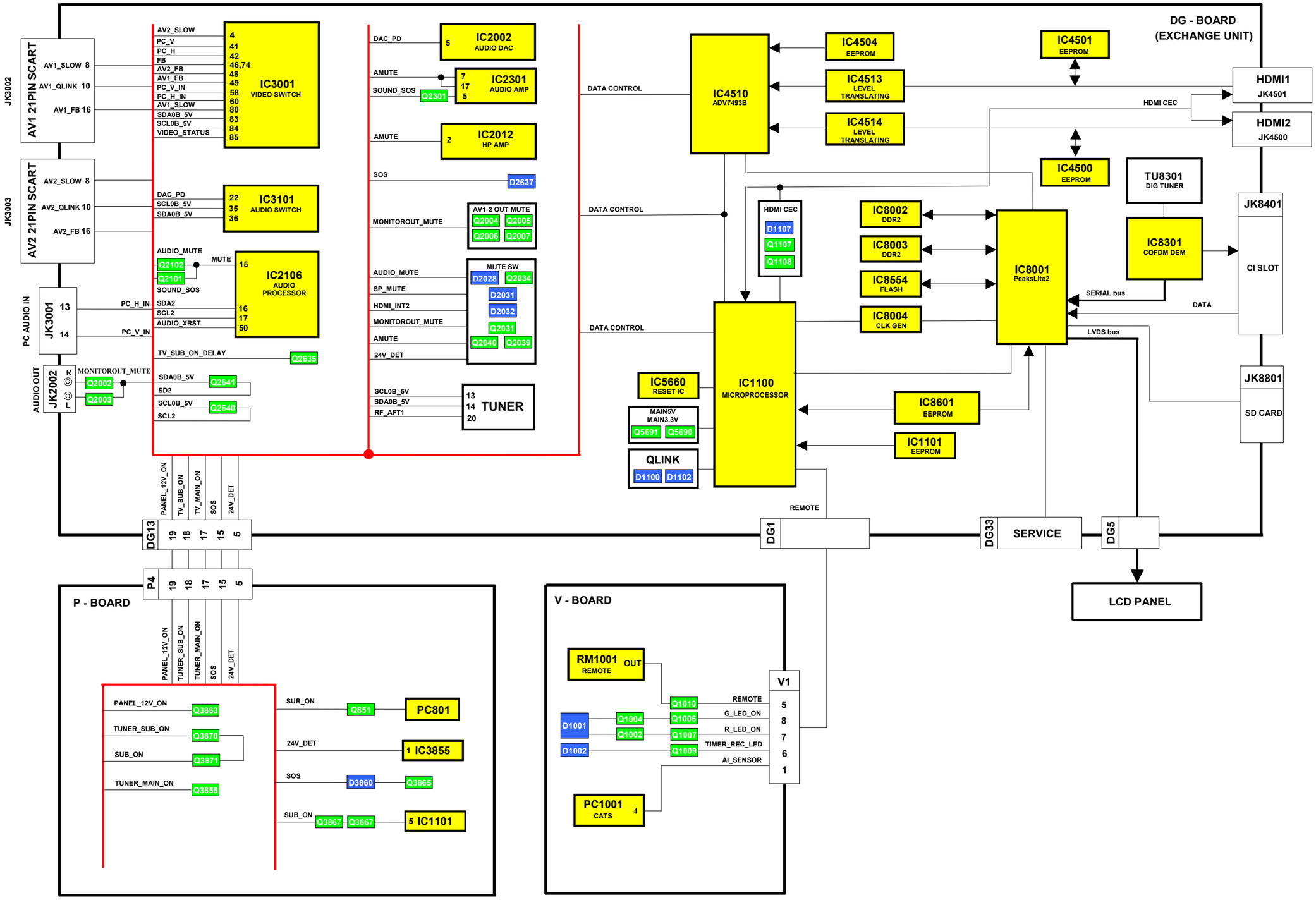

Parts Location

NOTE:
The numbers on the exploded view below refer to the exploded view section of the Replacement Parts List.

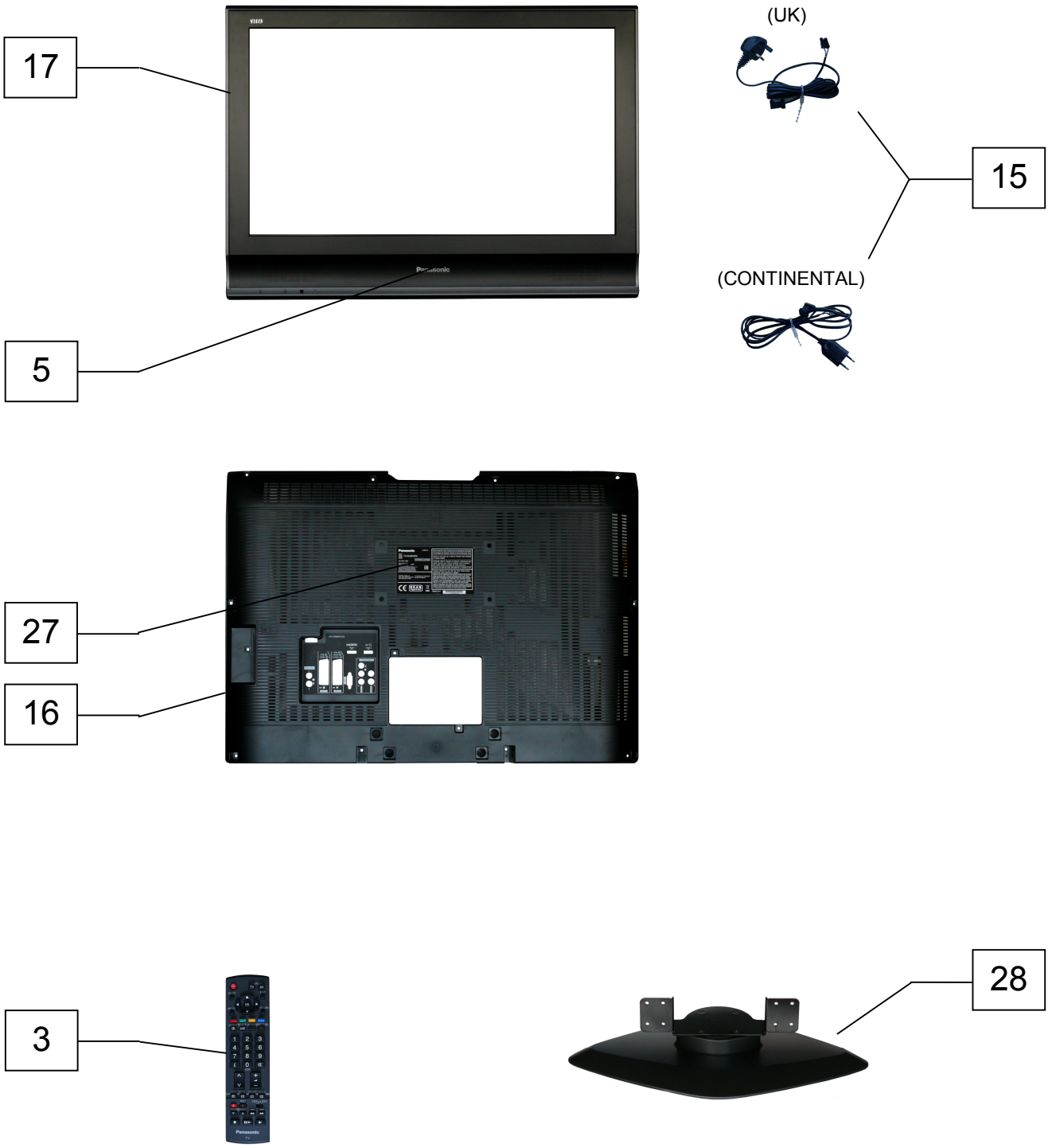

NOTE:
The numbers on the exploded view below refer to the exploded view section of the Replacement Parts List.

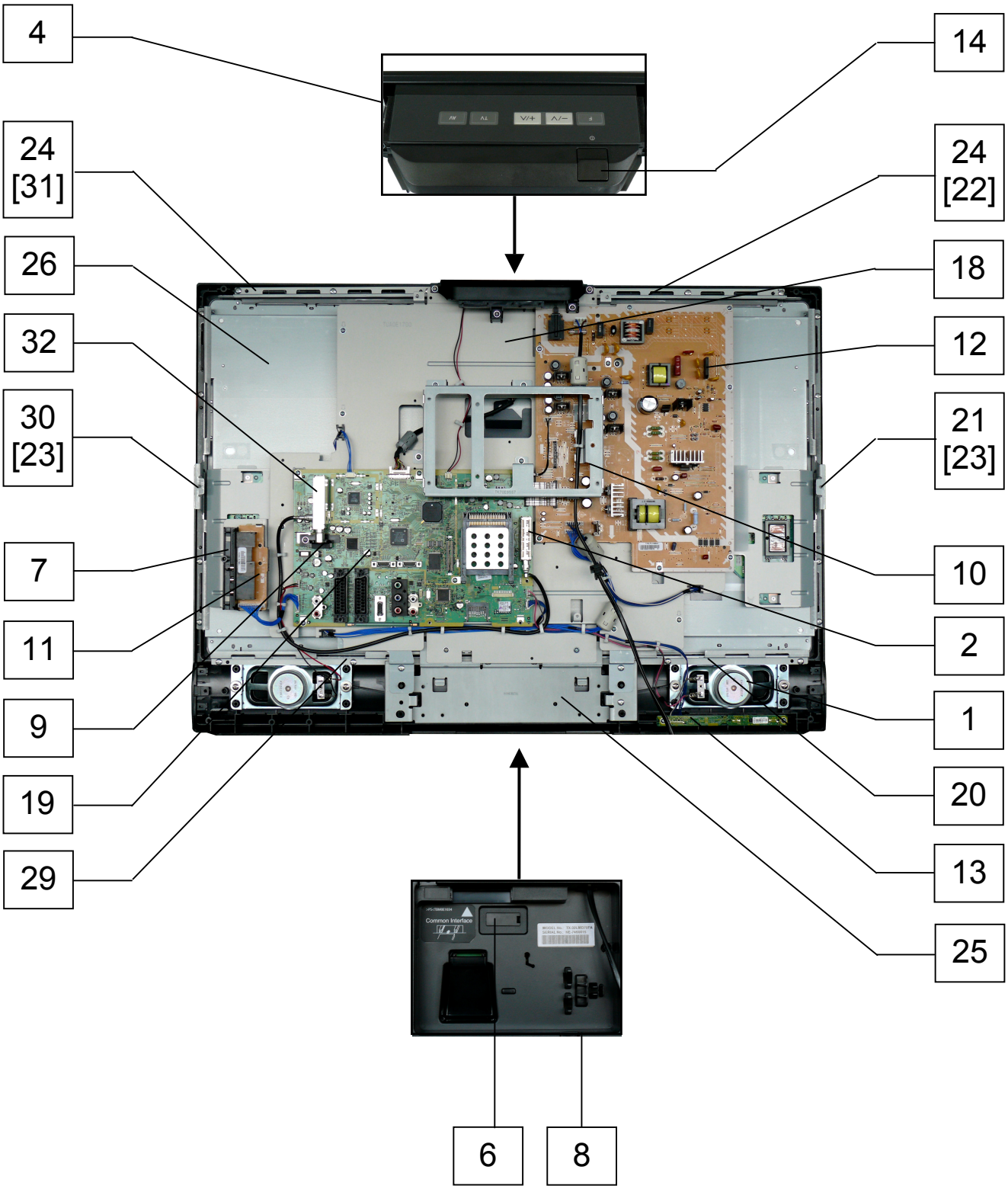

Replacement Parts List

Important Safety Notice

Components Identified by ⚠ mark have special characteristics important for safety.
* When replacing any of these components, use only manufacturers specified parts.
In case of ordering these spare parts, please always add the complete Model-Type number to your order.

RTL (Retention Time Limited)

Note: The marking (RTL) indicates that the Retention Time is Limited for this item. After the discontinuation of this assembly in production, the item will continue to be available for a specific period of time. The retention period of availability is dependent on the type of assembly, and in accordance with the laws governing part and product retention. After the end of this period, the assembly will no longer be available.

X The marking (X) indicates that board should be exchanged for service.

Cct Ref	Parts Number	Description		
COMMON PARTS				
EXPLODED VIEW				
1	EAS12S11F	SPEAKER		
2	ENV77M05D8F	TUNER DVB		
3	EUR7651110	REMOTE CONTROL		
4	K0RB00500023	KEY BUTTON MODULE		
5	TBMA216-1	PANASONIC BADGE		
6	TKP0E16001	CONNECTOR COVER		
7	TKP0E17101	AV3 BRACKET		
8	TKP0E24401	HDMI COVER		
9	TKP0E24501	TUNER BRACKET		
10	TKZ0E9557	VESA METAL		
11	TNP8EGL80AA	G P.C.B.	RTL	⚠
12	TNP8EPL80AA	P P.C.B.	RTL	⚠
13	TNP8EVL60AA	V P.C.B.	RTL	⚠
14	TTP0E0020	POWER BUTTON ASSY		
MISCELLANEOUS COMPONENTS				
.	J0KF00000018	FERRITE CORE		
.	J0KG00000100	FERRITE CORE		
.	R6RC/2P	BATTERY		
.	TBM0E0771	AV3 LABEL		
.	TBM0E1034	REAR AV LABEL/HDMI		
.	TES0E105-1	SPRING		
.	TKP0E17901	IR WINDOW		
.	TMK0E936	FELT		
.	TMK0E949	BARRIER SHEET		
.	TMM8E18048	TAB-RELEASE CABLE		
.	TMME075	EDGE SADDLE		
.	TUC0E574	BOTTOM SHIELD		
.	TUC0E575	TUNER SHIELD		
.	XTB4+15JFJK	SCREW		
.	XTV3+10JFJK	SCREW		
.	XTV3+8JFJK	SCREW		
.	XTW3+12TFJ	SCREW		
.	XYN4+F10FJ	SCREW		
I.C.s				
IC801	FA5501AP	MAIN PS CONTROL		
IC802	C1ZAZ0001474	MAIN PS CONTROL		
IC851	TL431BIDBZR	REGULATOR		
IC1100	MNZSFD7GP42	MICRO_GENX4		
IC1101	C3EBFC000042	EEPROM BR24L08F-WE2		
IC2002	C0FBBY000027	AUDIO DAC		
IC2006	C0JBAZ002261	BUFFER		

Cct Ref	Parts Number	Description
IC2008	C0CBCBE00001	REGULATOR
IC2010	C0CBCBC00190	REGULATOR
IC2011	C0ABBB000230	OPERATIONAL AMPLIFIER
IC2012	C1BB00000947	AUDIO AMPLIFIER
IC2013	C0DBGYY00281	REGULATOR
IC2106	C1AB00002746	AUDIO PROCESSOR
IC2107	C0DBFFD00003	1.8V REGULATOR
IC2301	C1AB00002730	AUDIO AMPLIFIER
IC2303	C0DBGYY00202	REGULATOR
IC2610	C0DBAJB00004	REGULATOR
IC3001	AN15876A-VT	VIDEO SWITCH
IC3101	AN15862A-VT	AUDIO SWITCH
IC3850	C0DAAZH00027	REGULATOR
IC3851	C0DAAZH00027	REGULATOR
IC3852	C0DAAZH00027	REGULATOR
IC3853	C0DAAZH00027	REGULATOR
IC3854	AN78L05M-E1	VOLTAGE REGULATOR
IC3855	C0EBM0000026	RESET IC
IC4500	C3EBDC000067	2KBIT EEPROM
IC4501	C3EBDC000067	2KBIT EEPROM
IC4504	C3EBEY000009	EEPROM M24C04-RMN6TP
IC4506	C0DBGGF00001	REGULATOR
IC4507	C0CBCBC00190	REGULATOR
IC4508	C0CBCAD00082	REGULATOR
IC4509	C0CBCAD00082	REGULATOR
IC4510	C1AB00002753	VIDEO DECODER
IC4515	C0BBBA000024	COMPARATOR
IC4800	C1ZBZ0003577	IC
IC5600	C0DBAYY00273	DC/DC CONVERTER
IC5601	C0DBAYY00274	DC/DC CONVERTER
IC5660	C0EBM0000026	RESET IC
IC5670	C0CBCBC00190	REGULATOR
IC5671	C0EBF0000376	RESET IC
IC8001	MN2WS0039AA	PEAKS LITE 2
IC8002	C3ABRY000015	DDR SDRAM
IC8003	C3ABRY000015	DDR SDRAM
IC8004	C0ZBZ0001030	CLK GEN
IC8301	C1AB00002710	COFDM DEMODULATOR
IC8302	C0CBCAD00082	REGULATOR
IC8401	C0JBAZ002800	BUS BUFFER
IC8402	C0JBAZ002692	BUS BUFFER
IC8403	C0ZBZ0001333	IC SWITCH
IC8404	C0JBAZ002692	BUS BUFFER
IC8405	C0JBAZ002692	BUS BUFFER
IC8406	C0JBAZ002692	BUS BUFFER
IC8407	C0JBAZ002692	BUS BUFFER
IC8408	C0JBAU000025	BUFFER
IC8409	C0JBAU000025	BUFFER
IC8621	C0JBAZ002845	LOGIC IC

Cct Ref	Parts Number	Description	
IC8622	C0JBAZ002845	LOGIC IC	
PC801	B3PAA0000363	PHOTO COUPLER	⚠
PC802	B3PAA0000363	PHOTO COUPLER	⚠
PC803	B3PAA0000363	PHOTO COUPLER	⚠
PC804	B3PAA0000363	PHOTO COUPLER	⚠
PC1001	B3JB00000026	PHOTO COUPLER	
RM1001	PNA4701M05TV	LED RECEIVER	
FUSES			
F801	K5D502BNA007	AC FUSE	⚠
PA3850	ERBSE0R50U	MICRO CHIP FUSE	
DIODES			
D801	RS406MBSR01	DIODE	
D802	ERZV10V621T2	VARISTOR	⚠
D803	MAZ81800ML	DIODE	
D804	B0EAJV000004	DIODE	
D805	MA2J11100L	DIODE	
D806	MA22F2000L	DIODE	
D807	B0EAJV000004	DIODE	
D808	B0BC022A0007	ZENER DIODE	
D809	MA22F2000L	DIODE	
D810	B0BA5R600016	DIODE	
D811	SD83304TE12R	DIODE	
D813	MAZ82000ML	ZENER DIODE	
D814	B0FABR000010	DIODE	
D816	1N4004-F	DIODE	
D817	SC9022TE12RA	DIODE	
D818	B0EAJV000004	DIODE	
D820	SD83304TE12R	DIODE	
D821	MAZY27000L	ZENER DIODE	
D822	MAZY27000L	ZENER DIODE	
D823	MA22F2000L	DIODE	
D824	MA22F2000L	DIODE	
D826	MA22F2000L	DIODE	
D827	B0ACCK000005	DIODE	
D828	B0BA5R600016	DIODE	
D829	BZX79B75A26A	DIODE	
D830	BZX79B75A26A	DIODE	
D831	MAZ81800ML	DIODE	
D851	B0JBSL000021	DIODE	
D852	MA2J11100L	DIODE	
D853	MA2J11100L	DIODE	
D854	B0JBSL000021	DIODE	
D856	MA2J11100L	DIODE	
D858	MAZ81600HL	ZENER DIODE	
D859	MAZ81600HL	ZENER DIODE	
D861	MA2J11100L	DIODE	
D1001	B3CKE0000007	DIODE	
D1002	B3ACA0000272	DIODE	
D1100	MA3X704A0L	DIODE MA704ATX	
D1102	MA3X704A0L	DIODE MA704ATX	
D1107	MA3X704A0L	DIODE MA704ATX	
D1112	MA2J72800L	DIODE	
D2026	MA2J11100L	DIODE	
D2028	MA2J11100L	DIODE	
D2029	MA2J11100L	DIODE	
D2031	MA2J11100L	DIODE	
D2032	MA2J11100L	DIODE	
D2033	MA2J11100L	DIODE	
D2034	MA2J11100L	DIODE	
D2119	B0BC01100001	ZENER DIODE	
D2189	MA2J11100L	DIODE	
D2200	MA22D3900L	DIODE	
D2301	MA2J11100L	DIODE	
D2302	MA2J11100L	DIODE	
D2303	MAZ30560HL	ZENER DIODE	
D2304	MA2J11100L	DIODE	
D2632	MA2J11100L	DIODE	

Cct Ref	Parts Number	Description
D2633	MA2J11100L	DIODE
D2634	MA3X78900L	DIODE
D2635	MA2J11100L	DIODE
D2636	MAZ30470HL	DIODE
D2637	MA2J11100L	DIODE
D2638	B0BC03900015	ZENER DIODE
D3003	MAZ81400ML	DIODE
D3004	MAZ81400ML	DIODE
D3005	MAZ81400ML	DIODE
D3008	MAZ81400ML	DIODE
D3009	MAZ81400ML	DIODE
D3010	MAZ81400ML	DIODE
D3011	MAZ81400ML	DIODE
D3012	MAZ81400ML	DIODE
D3013	MAZ81400ML	DIODE
D3014	MAZ81400ML	DIODE
D3025	MAZ81400ML	DIODE
D3027	MAZ81400ML	DIODE
D3028	MAZ81400ML	DIODE
D3030	MAZ81400ML	DIODE
D3031	MAZ81400ML	DIODE
D3032	MAZ81400ML	DIODE
D3038	MAZ81400ML	DIODE
D3039	MAZ81400ML	DIODE
D3041	MAZ81400ML	DIODE
D3042	MAZ81400ML	DIODE
D3043	MAZ81400ML	DIODE
D3044	B0BC01100001	ZENER DIODE
D3100	MAZ81400ML	DIODE
D3102	MA2J11100L	DIODE
D3334	MA2J11100L	DIODE
D3335	MA2J11100L	DIODE
D3336	MA2J11100L	DIODE
D3337	MA2J11100L	DIODE
D3338	MA2J11100L	DIODE
D3850	MAZ82700ML	DIODE
D3852	MAZ82000ML	ZENER DIODE
D3853	MAZ81800ML	DIODE
D3854	MAZ81800ML	DIODE
D3855	MAZ81000ML	DIODE
D3856	SD83304TE12R	DIODE
D3857	SD83304TE12R	DIODE
D3858	MA22F2000L	DIODE
D3859	MA22F2000L	DIODE
D3860	MA2J11100L	DIODE
D3862	SD83304TE12R	DIODE
D3863	MA2J11100L	DIODE
D3864	MA22F2000L	DIODE
D3865	MA2J11100L	DIODE
D3866	MA2J11100L	DIODE
D3867	MA2J11100L	DIODE
D3868	SD83304TE12R	DIODE
D3869	MA2J11100L	DIODE
D3870	MA22F2000L	DIODE
D3871	MA22F2000L	DIODE
D3872	MA22F2000L	DIODE
D4500	EZAEG2A50AX	ESD SUPPRESSOR
D4501	EZAEG2A50AX	ESD SUPPRESSOR
D4502	EZAEG2A50AX	ESD SUPPRESSOR
D4503	EZAEG2A50AX	ESD SUPPRESSOR
D4504	EZAEG2A50AX	ESD SUPPRESSOR
D4505	EZAEG2A50AX	ESD SUPPRESSOR
D4506	EZAEG2A50AX	ESD SUPPRESSOR
D4507	EZAEG2A50AX	ESD SUPPRESSOR
D4508	EZAEG2A50AX	ESD SUPPRESSOR
D4509	EZAEG2A50AX	ESD SUPPRESSOR
D4510	EZAEG2A50AX	ESD SUPPRESSOR
D4511	EZAEG2A50AX	ESD SUPPRESSOR

Cct Ref	Parts Number	Description
D4512	EZAEG2A50AX	ESD SUPPRESSOR
D4513	MAZ30560ML	DIODE
D4514	EZAEG2A50AX	ESD SUPPRESSOR
D4515	MAZ30560ML	DIODE
D4516	EZAEG2A50AX	ESD SUPPRESSOR
D4517	EZAEG2A50AX	ESD SUPPRESSOR
D4518	EZAEG2A50AX	ESD SUPPRESSOR
D4519	EZAEG2A50AX	ESD SUPPRESSOR
D4520	EZAEG2A50AX	ESD SUPPRESSOR
D4521	EZAEG2A50AX	ESD SUPPRESSOR
D4522	EZAEG2A50AX	ESD SUPPRESSOR
D4523	EZAEG2A50AX	ESD SUPPRESSOR
D4524	B0HCMM000014	DIODE
D4525	B0HCMM000014	DIODE
D4526	B0HCMM000014	DIODE
D4527	B0HCMM000014	DIODE
D4528	EZAEG2A50AX	ESD SUPPRESSOR
D4532	B0HCMM000014	DIODE
D4800	MA3X152K0L	DIODE
D5522	MA3X152D0L	DIODE
D5526	MA3X152E0L	DIODE
D5528	MAZ81200ML	ZENER DIIODE
D5529	MAZ80680LL	ZENER DIODE
D5530	MA2J11100L	DIODE
D5571	B0BC6R600005	ZENER DIODE
D5573	B0BC01100001	ZENER DIODE
D5601	MA22D3900L	DIODE
D5602	MA22D3900L	DIODE
D5603	B0JCDD000002	DIODE
D5604	B0JCDD000002	DIODE
D5605	MA22D3900L	DIODE
D5606	B0JCDD000002	DIODE
D5607	MAZ802400L	DIODE
D5608	MAZ802400L	DIODE
D5609	MAZ80560LL	ZENER DIODE
D5670	MA2J11100L	DIODE
D5671	B0HCMM000014	DIODE
D5673	B0HCMM000014	DIODE
D5690	B0BC6R600005	ZENER DIODE
D5691	B0BC6R600005	ZENER DIODE
D8901	MA3X704A0L	DIODE MA704ATX
D8902	EZAEG2A50AX	ESD SUPPRESSOR
D8903	EZAEG2A50AX	ESD SUPPRESSOR
D8904	EZAEG2A50AX	ESD SUPPRESSOR
D8905	EZAEG2A50AX	ESD SUPPRESSOR
D8906	EZAEG2A50AX	ESD SUPPRESSOR
D8907	EZAEG2A50AX	ESD SUPPRESSOR
D8908	EZAEG2A50AX	ESD SUPPRESSOR
D8909	EZAEG2A50AX	ESD SUPPRESSOR
TRANSISTORS		
Q802	B1CFNG000007	TRANSISTOR
Q803	2SC584500L	TRANSISTOR
Q804	2SC584500L	TRANSISTOR
Q805	B1CFNG000007	TRANSISTOR
Q807	B1CFND000009	TRANSISTOR
Q808	2SK2009TE81L	TRANSISTOR
Q809	2SB0710ARL	TRANSISTOR
Q810	XN0140100L	TRANSISTOR
Q811	2SD10300SL	TRANSISTOR
Q812	B1CERR000024	TRANSISTOR
Q813	2SD10300SL	TRANSISTOR
Q851	2SC584500L	TRANSISTOR
Q852	2SC584500L	TRANSISTOR
Q853	2SC584500L	TRANSISTOR
Q854	2SC584500L	TRANSISTOR
Q1002	2SB0709ASL	TRANSISTOR
Q1004	2SB0709ASL	TRANSISTOR

Cct Ref	Parts Number	Description
Q1006	2SD0601ASL	TRANSISTOR
Q1007	2SD0601ASL	TRANSISTOR
Q1009	2SD0601ASL	TRANSISTOR
Q1010	2SD0601ASL	TRANSISTOR
Q1107	2SD0601ASL	TRANSISTOR
Q1108	2SD0601ASL	TRANSISTOR
Q2002	2SC584500L	TRANSISTOR
Q2003	2SC584500L	TRANSISTOR
Q2004	2SC584500L	TRANSISTOR
Q2005	2SC584500L	TRANSISTOR
Q2006	2SC584500L	TRANSISTOR
Q2007	2SC584500L	TRANSISTOR
Q2015	2SA207700L	TRANSISTOR
Q2016	2SC584500L	TRANSISTOR
Q2017	2SC584500L	TRANSISTOR
Q2021	2SA207700L	TRANSISTOR
Q2031	2SA207700L	TRANSISTOR
Q2033	2SA207700L	TRANSISTOR
Q2034	2SC584500L	TRANSISTOR
Q2035	2SC584500L	TRANSISTOR
Q2039	2SC584500L	TRANSISTOR
Q2040	2SC584500L	TRANSISTOR
Q2041	2SC584500L	TRANSISTOR
Q2101	2SC584500L	TRANSISTOR
Q2102	2SC584500L	TRANSISTOR
Q2301	2SA207700L	TRANSISTOR
Q2635	2SC584500L	TRANSISTOR
Q2636	2SA207700L	TRANSISTOR
Q2637	2SA207700L	TRANSISTOR
Q2638	2SC584500L	TRANSISTOR
Q2639	B1CFNG000001	TRANSISTOR
Q2640	B1CBHD000002	TRANSISTOR
Q2641	B1CBHD000002	TRANSISTOR
Q3027	2SA207700L	TRANSISTOR
Q3028	2SA207700L	TRANSISTOR
Q3031	2SC584500L	TRANSISTOR
Q3032	2SC584500L	TRANSISTOR
Q3200	2SA207700L	TRANSISTOR
Q3850	B1CGRG000009	TRANSISTOR
Q3852	2SC584500L	TRANSISTOR
Q3853	2SA207700L	TRANSISTOR
Q3854	2SC584500L	TRANSISTOR
Q3855	2SC584500L	TRANSISTOR
Q3856	2SA207700L	TRANSISTOR
Q3857	2SC584500L	TRANSISTOR
Q3858	2SC584500L	TRANSISTOR
Q3859	2SC584500L	TRANSISTOR
Q3860	2SC584500L	TRANSISTOR
Q3863	2SC584500L	TRANSISTOR
Q3864	2SA207700L	TRANSISTOR
Q3865	2SA207700L	TRANSISTOR
Q3866	2SC584500L	TRANSISTOR
Q3867	2SC584500L	TRANSISTOR
Q3868	2SC584500L	TRANSISTOR
Q3869	2SC584500L	TRANSISTOR
Q3870	2SC584500L	TRANSISTOR
Q3871	2SA207700L	TRANSISTOR
Q4200	2SD0601ASL	TRANSISTOR
Q4201	2SB0709ASL	TRANSISTOR
Q4500	2SD0601ASL	TRANSISTOR
Q4501	2SD0601ASL	TRANSISTOR
Q4502	2SD0601ASL	TRANSISTOR
Q4503	2SD0601ASL	TRANSISTOR
Q4504	2SD0601ASL	TRANSISTOR
Q4505	2SD0601ASL	TRANSISTOR
Q4514	2SB0709ASL	TRANSISTOR
Q4515	2SB0709ASL	TRANSISTOR
Q4516	2SB0709ASL	TRANSISTOR

Cct Ref	Parts Number	Description
Q4517	2SB0709ASL	TRANSISTOR
Q4519	2SB0709ASL	TRANSISTOR
Q4800	2SD0601ASL	TRANSISTOR
Q4801	2SC39380QL	TRANSISTOR
Q4802	2SC39380QL	TRANSISTOR
Q4803	2SD0601ASL	TRANSISTOR
Q5521	2SA207700L	TRANSISTOR
Q5522	2SA207700L	TRANSISTOR
Q5523	2SD0601ASL	TRANSISTOR
Q5524	2SD0601ASL	TRANSISTOR
Q5561	B1DHDC000028	TRANSISTOR
Q5562	2SD0601ASL	TRANSISTOR
Q5600	B1MBEDA00015	TRANSISTOR
Q5601	B1MBEDA00015	TRANSISTOR
Q5602	B1MBEDA00015	TRANSISTOR
Q5603	2SD0601ASL	TRANSISTOR
Q5604	2SD0601ASL	TRANSISTOR
Q5690	B1ABCF000138	TRANSISTOR
Q5691	B1ABCF000138	TRANSISTOR
Q5692	B1DHDC000028	TRANSISTOR
Q5693	B1DHDC000028	TRANSISTOR
Q8401	2SD0601ASL	TRANSISTOR
Q8402	2SD0601ASL	TRANSISTOR
TRANSFORMERS		
T801	ETS35LZ136AD	TRANSFORMER ⚠
T802	ETS27BE1E9AD	TRANSFORMER ⚠
COILS		
L801	7025LYF-121K	CHOKE COIL
L802	EXCELSA35T	COIL
L803	EXCELSA35V	COIL
L804	EXCELDR35V	COIL
L805	EXCELDR35V	COIL
L806	EXCELDR35V	COIL
L807	EXCELSA35V	COIL
L1100	J0JHC0000078	COIL
L2001	J0JCC0000364	INDUCTOR
L2002	J0JCC0000364	INDUCTOR
L2003	J0JCC0000100	INDUCTOR
L2004	J0JCC0000100	INDUCTOR
L2005	J0JCC0000100	INDUCTOR
L2006	J0JCC0000100	INDUCTOR
L2007	J0JCC0000100	INDUCTOR
L2008	J0JCC0000100	INDUCTOR
L2009	J0JCC0000100	INDUCTOR
L2010	J0JCC0000100	INDUCTOR
L2015	J0JCC0000100	INDUCTOR
L2016	J0JCC0000100	INDUCTOR
L2021	J0JHC0000078	COIL
L2022	J0JHC0000078	COIL
L2026	G1C6R8MA0061	COIL
L2027	J0JHC0000045	COIL BLM18PG121SN1D
L2029	J0JCC0000077	COIL
L2034	J0JCC0000364	INDUCTOR
L2035	J0JCC0000364	INDUCTOR
L2040	J0JHC0000045	COIL BLM18PG121SN1D
L2300	G1C330MA0291	INDUCTOR
L2302	G1C330MA0291	INDUCTOR
L2304	G1C330MA0291	INDUCTOR
L2306	G1C330MA0291	INDUCTOR
L2308	J0JJC0000011	INDUCTOR
L2310	J0JJC0000011	INDUCTOR
L2648	G1C470MA0077	COIL
L2649	G1C100MA0072	COIL
L2650	G1C3R3ZA0083	COIL
L3001	J0JCC0000100	INDUCTOR
L3002	J0JCC0000100	INDUCTOR
L3004	G1C101M00018	COIL

Cct Ref	Parts Number	Description
L3206	J0JCC0000241	INDUCTOR
L3207	J0JCC0000241	INDUCTOR
L3209	J0JGC0000021	COIL
L3210	J0JCC0000241	INDUCTOR
L3211	J0JGC0000021	COIL
L3700	J0JCC0000100	INDUCTOR
L3701	J0JCC0000100	INDUCTOR
L3702	J0JCC0000364	INDUCTOR
L3703	J0JCC0000364	INDUCTOR
L3851	ELC12E470L	COIL
L3852	ELC12E101L	COIL
L3853	ELC12E330L	COIL
L3854	ELC12E680L	COIL
L4500	J0JHC0000078	COIL
L4501	J0JHC0000078	COIL
L4502	J0JHC0000078	COIL
L4503	J0JHC0000078	COIL
L4504	J0JHC0000078	COIL
L4505	J0JHC0000078	COIL
L4506	J0JHC0000078	COIL
L4507	J0JHC0000078	COIL
L4511	J0JHC0000078	COIL
L4512	J0JCC0000077	COIL
L4516	J0JHC0000078	COIL
L4517	J0JHC0000078	COIL
L4518	J0JHC0000078	COIL
L4520	J0JHC0000078	COIL
L4521	J0JHC0000078	COIL
L4524	J0JHC0000078	COIL
L4800	TLTAZ100K	COIL
L4801	J0JHC0000078	COIL
L4802	J0JJC0000011	INDUCTOR
L5564	G1C3R3ZA0083	COIL
L5565	G1C220MA0077	COIL
L5566	G1C3R3ZA0083	COIL
L5600	G1C2R2ZA0083	COIL
L5601	G1C2R2ZA0083	COIL
L5602	G1C3R3ZA0083	COIL
L5604	G1C100MA0077	COIL
L5605	J0JHC0000075	COIL BLM21PG600SN1D
L5606	G1C100MA0077	COIL
L5610	J0JHC0000035	COIL BLM21PG331SN1D
L5611	J0JHC0000035	COIL BLM21PG331SN1D
L5670	J0JHC0000078	COIL
L5690	J0JHC0000078	COIL
L5691	J0JHC0000078	COIL
L5735	J0JHC0000078	COIL
L8001	J0JHC0000045	COIL BLM18PG121SN1D
L8002	J0JHC0000045	COIL BLM18PG121SN1D
L8003	J0JHC0000045	COIL BLM18PG121SN1D
L8004	J0JHC0000045	COIL BLM18PG121SN1D
L8005	J0JHC0000045	COIL BLM18PG121SN1D
L8007	J0JHC0000045	COIL BLM18PG121SN1D
L8008	J0JHC0000045	COIL BLM18PG121SN1D
L8009	J0JHC0000045	COIL BLM18PG121SN1D
L8010	J0JHC0000045	COIL BLM18PG121SN1D
L8301	J0JHC0000045	COIL BLM18PG121SN1D
L8302	J0JHC0000045	COIL BLM18PG121SN1D
L8304	J0JHC0000045	COIL BLM18PG121SN1D
L8551	J0JHC0000075	COIL BLM21PG600SN1D
L8621	J0JHC0000075	COIL BLM21PG600SN1D
FILTERS		
FL2001	J0HABB000004	FILTER
FL2002	J0HABB000004	FILTER
FL3001	J0HABB000003	FILTER
FL3002	J0HABB000003	FILTER
FL3003	J0HABB000004	FILTER

Cct Ref	Parts Number	Description				
FL3004	J0HABB000004	FILTER				
FL3005	J0HABB000004	FILTER				
FL3008	J0HABB000003	FILTER				
FL4800	J0JAD0000028	FILTER				
FL4801	J0JAD0000028	FILTER				
FL4802	J0JAD0000028	FILTER				
FL4811	J0HABH000012	FILTER				
FL4812	J0HABH000012	FILTER				
FL4813	J0HABH000012	FILTER				
FL5731	J0HABH000013	FILTER				
FL5732	J0HABH000013	FILTER				
FL5733	J0HABH000013	FILTER				
FL5734	J0HABH000013	FILTER				
LF804	G0B353GA0043	LINE FILTER				⚠
CRYSTALS						
X1100	H0J100500035	CRYSTAL				
X2010	H0J245500082	CRYSTAL				
X4500	H0J270500113	CRYSTAL				
X8001	H0J270500061	CRYSTAL				
X8301	H0J204500006	CRYSTAL				
RESISTORS						
CF801	D4CAY8R0A010	THERMIST	-	-	8 Ω	
D5672	ERJ3GEY0R00	SMD	0.1W	-	0 Ω	
JA1	ERJ6GEY0R00	S.M.CARB	0.1W	-	0 Ω	
JA2	ERJ6GEY0R00	S.M.CARB	0.1W	-	0 Ω	
JA3	ERJ6GEY0R00	S.M.CARB	0.1W	-	0 Ω	
JA4	ERJ6GEY0R00	S.M.CARB	0.1W	-	0 Ω	
JS1115	ERJ2GE0R00X	SMD	.063W	-	0 Ω	
JS2031	ERJ2GE0R00X	SMD	.063W	-	0 Ω	
JS2032	ERJ2GE0R00X	SMD	.063W	-	0 Ω	
JS2046	ERJ3GEY0R00	SMD	0.1W	-	0 Ω	
JS2047	ERJ3GEY0R00	SMD	0.1W	-	0 Ω	
JS2051	ERJ3GEY0R00	SMD	0.1W	-	0 Ω	
JS2053	ERJ3GEY0R00	SMD	0.1W	-	0 Ω	
JS3005	ERJ6GEY0R00	S.M.CARB	0.1W	-	0 Ω	
JS3007	ERJ6GEY0R00	S.M.CARB	0.1W	-	0 Ω	
JS3008	ERJ6GEY0R00	S.M.CARB	0.1W	-	0 Ω	
JS3009	ERJ6GEY0R00	S.M.CARB	0.1W	-	0 Ω	
JS3010	ERJ6GEY0R00	S.M.CARB	0.1W	-	0 Ω	
JS3011	ERJ6GEY0R00	S.M.CARB	0.1W	-	0 Ω	
JS3012	ERJ6GEY0R00	S.M.CARB	0.1W	-	0 Ω	
JS3013	ERJ6GEY0R00	S.M.CARB	0.1W	-	0 Ω	
JS3014	ERJ6GEY0R00	S.M.CARB	0.1W	-	0 Ω	
JS3015	ERJ6GEY0R00	S.M.CARB	0.1W	-	0 Ω	
JS3016	ERJ6GEY0R00	S.M.CARB	0.1W	-	0 Ω	
JS3018	ERJ6GEY0R00	S.M.CARB	0.1W	-	0 Ω	
JS3019	ERJ6GEY0R00	S.M.CARB	0.1W	-	0 Ω	
JS3020	ERJ6GEY0R00	S.M.CARB	0.1W	-	0 Ω	
JS3032	ERJ3GEY0R00	SMD	0.1W	-	0 Ω	
JS3208	ERJ2GE0R00X	SMD	.063W	-	0 Ω	
JS5568	ERJ3GEY0R00	SMD	0.1W	-	0 Ω	
JS5569	ERJ3GEY0R00	SMD	0.1W	-	0 Ω	
JSP866	ERJ8GEY0R00	S.M.CARB	.125W	-	0 Ω	
R801	ERC12ZGK105C	SOLID	0.5W	10%	1M Ω	⚠
R802	EROS2THF4703	METAL	0.25W	1%	470K Ω	
R803	EROS2THF4703	METAL	0.25W	1%	470K Ω	
R804	EROS2THF3303	METAL	0.25W	1%	330K Ω	
R805	ERJ6ENF1002	SMD	0.125	1%	10K Ω	
R806	ERJ6GEYJ104	S.M.CARB	0.1W	5%	100K Ω	
R807	ERJ6GEYJ680	S.M.CARB	0.1W	5%	68 Ω	
R808	ERJ6GEYJ393	S.M.CARB	0.1W	5%	39K Ω	
R809	ERJ6GEYJ473	S.M.CARB	0.1W	5%	47K Ω	
R810	ERJ6GEYJ221	S.M.CARB	0.1W	5%	220 Ω	
R811	ERJ6GEYJ473	S.M.CARB	0.1W	5%	47K Ω	
R812	ERJ6GEYJ220	S.M.CARB	0.1W	5%	22 Ω	
R813	ERJ6GEYJ473	S.M.CARB	0.1W	5%	47K Ω	
R814	ERJ6GEYJ473	S.M.CARB	0.1W	5%	47K Ω	

Cct Ref	Parts Number	Description				
R815	ERD25TJ224	CARBON	0.25W	5%	220K Ω	
R816	ERJ6GEYJ753	S.M.CARB	0.1W	5%	75K Ω	
R817	ERJ12YJ182U	SMD	0.5W	5%	1K8 Ω	
R818	ERJ6GEYJ473	S.M.CARB	0.1W	5%	47K Ω	
R819	ERD25TJ274	CARBON	0.25W	5%	270K Ω	
R820	D0D2R68KA003	RESISTOR	2W	10%	R68 Ω	
R821	D0D2R68KA003	RESISTOR	2W	10%	R68 Ω	
R822	ERJ6ENF3902V	SMD	.125W	1%	39K Ω	
R823	EROS2THD8203	METAL	0.25W	0.5	820K Ω	
R824	EROS2THD7503	METAL	0.25W	0.5	750K Ω	
R825	EROS2THD7503	METAL	0.25W	0.5	750K Ω	
R826	ERJ6RBD153V	SMD	0.1W	0.5	15K Ω	
R827	ERJ6GEYJ102	S.M.CARB	0.1W	5%	1K Ω	
R828	ERD25TJ274	CARBON	0.25W	5%	270K Ω	
R829	ERD25TJ334	CARBON	0.25W	5%	330K Ω	
R830	ERDS2TJ105T	CARBON	0.25W	5%	1M Ω	
R831	ERDS2TJ105T	CARBON	0.25W	5%	1M Ω	
R832	ERX3FJ6R8H	METAL	3W	5%	6R8 Ω	
R834	ERG1SJ330P	METAL	1W	5%	33 Ω	
R835	D0D2R33KA003	WOUND	2W	10%	R33 Ω	
R836	ERJ6GEYJ223	S.M.CARB	0.1W	5%	22K Ω	
R837	D0D2R33KA003	WOUND	2W	10%	R33 Ω	
R838	ERJ6GEYJ103	S.M.CARB	0.1W	5%	10K Ω	
R839	ERC12ZGK105C	SOLID	0.5W	10%	1M Ω	⚠
R840	ERJ6GEYJ272	S.M.CARB	0.1W	5%	2K7 Ω	
R841	ERG1SJ271	METAL	1W	5%	270 Ω	
R842	ERJ8GEYJ472V	SMD	0.25W	5%	4K7 Ω	
R843	ERJ6GEYJ153	S.M.CARB	0.1W	5%	15K Ω	
R844	ERJ6GEYJ223	S.M.CARB	0.1W	5%	22K Ω	
R845	ERJ12YJ152U	SMD	0.5W	5%	1K5 Ω	
R846	ERJ6GEYJ104	S.M.CARB	0.1W	5%	100K Ω	
R847	ERJ6GEYJ103	S.M.CARB	0.1W	5%	10K Ω	
R848	ERJ6GEYJ221	S.M.CARB	0.1W	5%	220 Ω	
R849	D0XB106J0003	RESISTOR	1W	5%	10M Ω	⚠
R850	ERDS2TJ824T	CARBON	0.25W	5%	820K Ω	
R851	ERJ6GEYJ153	S.M.CARB	0.1W	5%	15K Ω	
R852	ERJ6GEYJ223	S.M.CARB	0.1W	5%	22K Ω	
R853	ERJ6GEYJ103	S.M.CARB	0.1W	5%	10K Ω	
R854	ERJ6GEYJ562	S.M.CARB	0.1W	5%	5K6 Ω	
R855	ERJ6GEYJ103	S.M.CARB	0.1W	5%	10K Ω	
R857	ERJ6RBD303	SMD	0.1W	0.5	30K Ω	
R858	ERJ6RBD752	SMD	0.1W	0.5	7K5 Ω	
R860	ERJ6RBD432	SMD	0.1W	0.5	4K3 Ω	
R861	ERJ6GEYJ473	S.M.CARB	0.1W	5%	47K Ω	
R862	ERJ6GEYJ683	S.M.CARB	0.1W	5%	68K Ω	
R863	ERJ6GEYJ102	S.M.CARB	0.1W	5%	1K Ω	
R864	ERJ6GEYJ154	S.M.CARB	0.1W	5%	150K Ω	
R865	ERJ6GEYJ154	S.M.CARB	0.1W	5%	150K Ω	
R866	ERJ6GEYJ223	S.M.CARB	0.1W	5%	22K Ω	
R867	ERJ6GEYJ103	S.M.CARB	0.1W	5%	10K Ω	
R868	ERJ6GEYJ102	S.M.CARB	0.1W	5%	1K Ω	
R869	ERJ6GEYJ222	S.M.CARB	0.1W	5%	2K2 Ω	
R870	ERJ3GEYJ103	SMD	0.1W	5%	10K Ω	
R871	ERJ3GEYJ223V	S.M.CARB	0.1W	5%	22K Ω	
R872	ERJ3GEYJ222	SMD	0.1W	5%	2K2 Ω	
R873	ERJ6GEYJ152	S.M.CARB	0.1W	5%	1K5 Ω	
R874	ERJ6GEYJ201	S.M.CARB	0.1W	5%	200 Ω	
R878	ERJ3GEYJ472	SMD	0.1W	5%	4K7 Ω	
R879	ERJ3GEYJ472	SMD	0.1W	5%	4K7 Ω	
R880	ERJ6RBD103V	SMD	0.1W	0.5	10K Ω	
R881	ERJ6RBD223V	SMD	0.1W	0.5	22K Ω	
R882	ERJ6GEYJ223	S.M.CARB	0.1W	5%	22K Ω	
R883	ERJ6GEYJ103	S.M.CARB	0.1W	5%	10K Ω	
R884	ERJ6GEYJ103	S.M.CARB	0.1W	5%	10K Ω	
R885	ERJ6GEYJ223	S.M.CARB	0.1W	5%	22K Ω	
R886	ERJ6GEYJ103	S.M.CARB	0.1W	5%	10K Ω	
R887	ERJ6GEYJ103	S.M.CARB	0.1W	5%	10K Ω	
R888	ERJ6GEYJ473	S.M.CARB	0.1W	5%	47K Ω	

Cct Ref	Parts Number	Description			
R889	ERJ6GEYJ473	S.M.CARB	0.1W	5%	47K Ω
R890	ERJ6GEYJ102	S.M.CARB	0.1W	5%	1K Ω
R891	ERJ6GEYJ102	S.M.CARB	0.1W	5%	1K Ω
R892	ERJ6GEYJ102	S.M.CARB	0.1W	5%	1K Ω
R893	ERJ6GEYJ102	S.M.CARB	0.1W	5%	1K Ω
R894	ERJ6GEYJ102	S.M.CARB	0.1W	5%	1K Ω
R895	ERJ6GEYJ102	S.M.CARB	0.1W	5%	1K Ω
R896	ERJ3GEYJ222	SMD	0.1W	5%	2K2 Ω
R897	ERJ3GEYJ103	SMD	0.1W	5%	10K Ω
R898	ERJ3GEYJ472	SMD	0.1W	5%	4K7 Ω
R899	ERJ3GEYJ223V	S.M.CARB	0.1W	5%	22K Ω
R1002	ERJ3GEYJ473V	S.M.CARB	0.1W	5%	47K Ω
R1003	ERJ3GEYJ102	SMD	0.1W	5%	1K Ω
R1006	ERJ3GEYJ681V	SMD	0.1W	5%	680 Ω
R1007	ERJ3GEYJ332	SMD	0.1W	5%	3K3 Ω
R1008	ERJ3GEYJ473V	S.M.CARB	0.1W	5%	47K Ω
R1010	ERJ3GEYJ473V	S.M.CARB	0.1W	5%	47K Ω
R1012	ERJ3GEYJ273	SMD	0.1W	5%	27K Ω
R1015	ERJ3GEYJ103	SMD	0.1W	5%	10K Ω
R1017	ERJ3GEYJ103	SMD	0.1W	5%	10K Ω
R1019	ERJ3GEYJ103	SMD	0.1W	5%	10K Ω
R1020	ERJ3GEYJ103	SMD	0.1W	5%	10K Ω
R1022	ERJ3GEYJ152	SMD	0.1W	5%	1K5 Ω
R1028	ERJ3GEYJ470	SMD	0.1W	5%	47 Ω
R1033	ERJ3EKF2402V	SMD	0.1W	1%	24K Ω
R1034	ERJ3EKF5102V	SMD	0.1W	1%	51K Ω
R1035	ERJ3GEYJ473V	S.M.CARB	0.1W	5%	47K Ω
R1044	ERJ3GEY0R00	SMD	0.1W	-	0 Ω
R1046	ERJ3GEYJ223V	S.M.CARB	0.1W	5%	22K Ω
R1048	ERJ3GEYJ224V	S.M.CARB	0.1W	5%	220K Ω
R1049	ERJ3GEYJ473V	S.M.CARB	0.1W	5%	47K Ω
R1104	ERJ2GEJ473X	SMD	.063W	5%	47K Ω
R1110	ERJ2GEJ273X	SMD	.063W	5%	27K Ω
R1122	ERJ2GEJ473X	SMD	.063W	5%	47K Ω
R1124	ERJ2GEJ220X	SMD	.063W	5%	22 Ω
R1125	ERJ2GEJ220X	SMD	.063W	5%	22 Ω
R1126	ERJ2GEJ273X	SMD	.063W	5%	27K Ω
R1134	ERJ2GEJ101X	SMD	.063W	5%	100 Ω
R1138	ERJ2GEJ473X	SMD	.063W	5%	47K Ω
R1144	ERJ2GEJ473X	SMD	.063W	5%	47K Ω
R1146	ERJ2GEJ102X	SMD	.063W	5%	1K Ω
R1147	ERJ2GEJ473X	SMD	.063W	5%	47K Ω
R1148	ERJ2GEJ473X	SMD	.063W	5%	47K Ω
R1152	ERJ2GEJ473X	SMD	.063W	5%	47K Ω
R1153	ERJ2GEJ821X	SMD	.063W	5%	820 Ω
R1162	ERJ2GEJ101X	SMD	.063W	5%	100 Ω
R1163	ERJ2GEJ105X	SMD	.063W	5%	1M Ω
R1164	ERJ2GEJ103X	SMD	.063W	5%	10K Ω
R1165	ERJ2GEJ182X	SMD	.063W	5%	1K8 Ω
R1166	ERJ2GEJ104X	SMD	.063W	5%	100K Ω
R1169	ERJ2GEJ563X	SMD	.063W	5%	56K Ω
R1170	ERJ2GEJ273X	SMD	.063W	5%	27K Ω
R1171	ERJ2GEJ563X	SMD	.063W	5%	56K Ω
R1172	ERJ2GEJ273X	SMD	.063W	5%	27K Ω
R1173	ERJ6GEYJ201	S.M.CARB	0.1W	5%	200 Ω
R1174	ERJ2GEJ220X	SMD	.063W	5%	22 Ω
R1175	ERJ2GEJ220X	SMD	.063W	5%	22 Ω
R1179	ERJ2GEJ101X	SMD	.063W	5%	100 Ω
R1181	ERJ2GEJ101X	SMD	.063W	5%	100 Ω
R1182	ERJ2GEJ273X	SMD	.063W	5%	27K Ω
R1183	ERJ2GEJ220X	SMD	.063W	5%	22 Ω
R1184	ERJ2GEJ220X	SMD	.063W	5%	22 Ω
R1186	ERJ2GEJ101X	SMD	.063W	5%	100 Ω
R1194	ERJ2GEJ563X	SMD	.063W	5%	56K Ω
R1195	ERJ2GEJ104X	SMD	.063W	5%	100K Ω
R1196	ERJ2GEJ333X	SMD	.063W	5%	33K Ω
R1198	ERJ2GEJ104X	SMD	.063W	5%	100K Ω
R1199	ERJ2GEJ473X	SMD	.063W	5%	47K Ω

Cct Ref	Parts Number	Description			
R1200	ERJ2GEJ562X	SMD	.063W	5%	5K6 Ω
R1201	ERJ2GEJ562X	SMD	.063W	5%	5K6 Ω
R1202	ERJ2GEJ473X	SMD	.063W	5%	47K Ω
R1203	ERJ2GEJ473X	SMD	.063W	5%	47K Ω
R1204	ERJ2GE0R00X	SMD	.063W	-	0 Ω
R1205	ERJ2GEJ220X	SMD	.063W	5%	22 Ω
R1206	ERJ2GEJ220X	SMD	.063W	5%	22 Ω
R1216	ERJ2GEJ333X	SMD	.063W	5%	33K Ω
R1217	ERJ2GEJ563X	SMD	.063W	5%	56K Ω
R1218	ERJ2GEJ103X	SMD	.063W	5%	10K Ω
R1219	ERJ2GEJ103X	SMD	.063W	5%	10K Ω
R1220	ERJ2GEJ103X	SMD	.063W	5%	10K Ω
R1221	ERJ3EKF7151V	SMD	0.1W	1%	7K15 Ω
R1222	ERJ2GEJ473X	SMD	.063W	5%	47K Ω
R1223	ERJ2GEJ473X	SMD	.063W	5%	47K Ω
R1226	ERJ2GEJ473X	SMD	.063W	5%	47K Ω
R1227	ERJ2GEJ473X	SMD	.063W	5%	47K Ω
R1228	ERJ2GEJ473X	SMD	.063W	5%	47K Ω
R1229	ERJ2GEJ101X	SMD	.063W	5%	100 Ω
R1231	ERJ2GEJ473X	SMD	.063W	5%	47K Ω
R1232	ERJ2GEJ473X	SMD	.063W	5%	47K Ω
R1233	ERJ2GEJ473X	SMD	.063W	5%	47K Ω
R1234	ERJ2GEJ473X	SMD	.063W	5%	47K Ω
R1235	ERJ2GEJ104X	SMD	.063W	5%	100K Ω
R1236	ERJ2GEJ473X	SMD	.063W	5%	47K Ω
R1237	ERJ2GEJ473X	SMD	.063W	5%	47K Ω
R1243	ERJ2GEJ473X	SMD	.063W	5%	47K Ω
R1244	ERJ2GEJ473X	SMD	.063W	5%	47K Ω
R1245	ERJ2GEJ473X	SMD	.063W	5%	47K Ω
R1246	ERJ2GEJ473X	SMD	.063W	5%	47K Ω
R1247	ERJ2GEJ473X	SMD	.063W	5%	47K Ω
R1248	ERJ2GEJ473X	SMD	.063W	5%	47K Ω
R1249	ERJ2GEJ473X	SMD	.063W	5%	47K Ω
R1250	ERJ2GEJ473X	SMD	.063W	5%	47K Ω
R1251	ERJ2GEJ473X	SMD	.063W	5%	47K Ω
R1255	ERJ2GEJ102X	SMD	.063W	5%	1K Ω
R1263	ERJ2GEJ473X	SMD	.063W	5%	47K Ω
R2003	ERJ2GE0R00X	SMD	.063W	-	0 Ω
R2010	ERJ2GEJ473X	SMD	.063W	5%	47K Ω
R2011	ERJ2GEJ473X	SMD	.063W	5%	47K Ω
R2012	ERJ2GEJ473X	SMD	.063W	5%	47K Ω
R2013	ERJ2GEJ473X	SMD	.063W	5%	47K Ω
R2014	ERJ2GEJ473X	SMD	.063W	5%	47K Ω
R2015	ERJ2GEJ473X	SMD	.063W	5%	47K Ω
R2018	ERJ2GEJ473X	SMD	.063W	5%	47K Ω
R2019	ERJ2GEJ473X	SMD	.063W	5%	47K Ω
R2020	ERJ2GEJ473X	SMD	.063W	5%	47K Ω
R2023	ERJ2GEJ473X	SMD	.063W	5%	47K Ω
R2025	ERJ2GEJ473X	SMD	.063W	5%	47K Ω
R2028	ERJ2GEJ473X	SMD	.063W	5%	47K Ω
R2029	ERJ6GEYJ473	S.M.CARB	0.1W	5%	47K Ω
R2030	ERJ6GEYJ473	S.M.CARB	0.1W	5%	47K Ω
R2031	ERJ6GEYJ473	S.M.CARB	0.1W	5%	47K Ω
R2032	ERJ6GEYJ473	S.M.CARB	0.1W	5%	47K Ω
R2035	ERJ2GEJ104X	SMD	.063W	5%	100K Ω
R2036	ERJ2GEJ104X	SMD	.063W	5%	100K Ω
R2037	ERJ2GEJ222X	SMD	.063W	5%	2K2 Ω
R2038	ERJ2GEJ222X	SMD	.063W	5%	2K2 Ω
R2039	ERJ2GEJ104X	SMD	.063W	5%	100K Ω
R2040	ERJ2GEJ104X	SMD	.063W	5%	100K Ω
R2041	ERJ2GEJ222X	SMD	.063W	5%	2K2 Ω
R2042	ERJ2GEJ222X	SMD	.063W	5%	2K2 Ω
R2046	ERJ3GEY0R00	SMD	0.1W	-	0 Ω
R2047	ERJ3GEYJ331	SMD	0.1W	5%	330 Ω
R2048	ERJ2GEJ222X	SMD	.063W	5%	2K2 Ω
R2049	ERJ3GEYJ331	SMD	0.1W	5%	330 Ω
R2050	ERJ2GEJ222X	SMD	.063W	5%	2K2 Ω
R2051	ERJ6GEYJ184	S.M.CARB	0.1W	5%	180K Ω

Cct Ref	Parts Number	Description			
R2052	ERJ6GEYJ184	S.M.CARB	0.1W	5%	180K Ω
R2053	ERJ2GEJ104X	SMD	.063W	5%	100K Ω
R2054	ERJ2GEJ104X	SMD	.063W	5%	100K Ω
R2056	ERJ2GEJ220X	SMD	.063W	5%	22 Ω
R2057	ERJ2GEJ220X	SMD	.063W	5%	22 Ω
R2058	ERJ3GEYJ301V	SMD	0.1W	5%	300 Ω
R2059	ERJ2GEJ105X	SMD	.063W	5%	1M Ω
R2066	ERJ3GEYJ122V	S.M.CARB	0.1W	5%	1K2 Ω
R2067	ERJ3GEYJ122V	S.M.CARB	0.1W	5%	1K2 Ω
R2072	ERJ2GEJ101X	SMD	.063W	5%	100 Ω
R2073	ERJ2GEJ330X	SMD	.063W	5%	33 Ω
R2074	ERJ3GEYJ123	SMD	0.1W	5%	12K Ω
R2075	ERJ3GEYJ123	SMD	0.1W	5%	12K Ω
R2084	ERJ3GEYJ472	SMD	0.1W	5%	4K7 Ω
R2085	ERJ3GEYJ561	SMD	0.1W	5%	560 Ω
R2086	ERJ2GEJ471X	SMD	.063W	5%	470 Ω
R2088	ERJ2GEJ101X	SMD	.063W	5%	100 Ω
R2089	ERJ3GEYJ561	SMD	0.1W	5%	560 Ω
R2092	ERJ2GEJ471X	SMD	.063W	5%	470 Ω
R2093	ERJ2GEJ332X	SMD	.063W	5%	3K3 Ω
R2094	ERJ2GEJ222X	SMD	.063W	5%	2K2 Ω
R2096	ERJ2GEJ103X	SMD	.063W	5%	10K Ω
R2097	ERJ2GEJ332X	SMD	.063W	5%	3K3 Ω
R2098	ERJ3GEYJ103	SMD	0.1W	5%	10K Ω
R2099	ERJ3GEYJ103	SMD	0.1W	5%	10K Ω
R2100	ERJ3EKF2002V	SMD	0.1W	1%	20 Ω
R2101	ERJ2GEJ331X	SMD	.063W	5%	330 Ω
R2102	ERJ2GEJ331X	SMD	.063W	5%	330 Ω
R2104	ERJ3EKF2001V	SMD	0.1W	1%	2K Ω
R2110	ERJ2GEJ103X	SMD	.063W	5%	10K Ω
R2111	ERJ2GEJ101X	SMD	.063W	5%	100 Ω
R2112	ERJ2GEJ105X	SMD	.063W	5%	1M Ω
R2113	ERJ3EKF1203V	SMD	0.1W	1%	120K Ω
R2114	ERJ3EKF7502V	SMD	0.1W	1%	75K Ω
R2116	ERJ3GEY0R00	SMD	0.1W	-	0 Ω
R2117	ERJ3GEY0R00	SMD	0.1W	-	0 Ω
R2118	ERJ2GEJ105X	SMD	.063W	5%	1M Ω
R2119	ERJ2GEJ103X	SMD	.063W	5%	10K Ω
R2122	ERJ2GEJ103X	SMD	.063W	5%	10K Ω
R2123	ERJ2GEJ473X	SMD	.063W	5%	47K Ω
R2124	ERJ2GEJ103X	SMD	.063W	5%	10K Ω
R2125	ERJ2GEJ222X	SMD	.063W	5%	2K2 Ω
R2127	ERJ2GEJ103X	SMD	.063W	5%	10K Ω
R2128	ERJ2GEJ473X	SMD	.063W	5%	47K Ω
R2129	ERJ2GEJ103X	SMD	.063W	5%	10K Ω
R2131	ERJ2GEJ103X	SMD	.063W	5%	10K Ω
R2132	ERJ2GEJ473X	SMD	.063W	5%	47K Ω
R2133	ERJ2GEJ122X	SMD	.063W	5%	1K2 Ω
R2134	ERJ2GEJ122X	SMD	.063W	5%	1K2 Ω
R2137	ERJ2GEJ221X	SMD	.063W	5%	220 Ω
R2138	ERJ2GEJ221X	SMD	.063W	5%	220 Ω
R2144	ERJ2GEJ103X	SMD	.063W	5%	10K Ω
R2145	ERJ3EKF2002V	SMD	0.1W	1%	20 Ω
R2146	ERJ3EKF2002V	SMD	0.1W	1%	20 Ω
R2149	ERJ2GEJ103X	SMD	.063W	5%	10K Ω
R2150	ERJ3EKF2002V	SMD	0.1W	1%	20 Ω
R2151	ERJ3EKF2002V	SMD	0.1W	1%	20 Ω
R2152	ERJ2GEJ220X	SMD	.063W	5%	22 Ω
R2154	ERJ2GEJ220X	SMD	.063W	5%	22 Ω
R2156	ERJ2GEJ331X	SMD	.063W	5%	330 Ω
R2157	ERJ2GEJ331X	SMD	.063W	5%	330 Ω
R2159	ERJ2GEJ331X	SMD	.063W	5%	330 Ω
R2160	ERJ2GEJ221X	SMD	.063W	5%	220 Ω
R2162	ERJ2GEJ221X	SMD	.063W	5%	220 Ω
R2164	ERJ2GEJ221X	SMD	.063W	5%	220 Ω
R2165	ERJ2GEJ103X	SMD	.063W	5%	10K Ω
R2166	ERJ3EKF1602V	SMD	0.1W	1%	16K Ω
R2167	ERJ2GEJ221X	SMD	.063W	5%	220 Ω

Cct Ref	Parts Number	Description			
R2168	ERJ3EKF1602V	SMD	0.1W	1%	16K Ω
R2169	ERJ3EKF2202V	SMD	0.1W	1%	22K Ω
R2170	ERJ2GEJ221X	SMD	.063W	5%	220 Ω
R2171	ERJ2GEJ221X	SMD	.063W	5%	220 Ω
R2172	ERJ2GEJ221X	SMD	.063W	5%	220 Ω
R2173	ERJ2GEJ221X	SMD	.063W	5%	220 Ω
R2178	ERJ2GEJ102X	SMD	.063W	5%	1K Ω
R2179	ERJ2GEJ103X	SMD	.063W	5%	10K Ω
R2180	ERJ2GEJ102X	SMD	.063W	5%	1K Ω
R2181	ERJ3EKF2202V	SMD	0.1W	1%	22K Ω
R2182	ERJ3EKF3602V	SMD	0.1W	1%	36K Ω
R2183	ERJ3EKF3602V	SMD	0.1W	1%	36K Ω
R2184	ERJ6GEYJ101	S.M.CARB	0.1W	5%	100 Ω
R2185	ERJ6GEYJ101	S.M.CARB	0.1W	5%	100 Ω
R2186	ERJ3GEYJ823	SMD	0.1W	5%	82K Ω
R2187	ERJ6GEY0R00	S.M.CARB	0.1W	-	0 Ω
R2189	ERJ3GEYJ103	SMD	0.1W	5%	10K Ω
R2192	ERJ3GEYJ104V	S.M.CARB	0.1W	5%	100K Ω
R2193	ERJ3GEYJ104V	S.M.CARB	0.1W	5%	100K Ω
R2194	ERJ2GEJ102X	SMD	.063W	5%	1K Ω
R2195	ERJ2GEJ104X	SMD	.063W	5%	100K Ω
R2196	ERJ2GEJ104X	SMD	.063W	5%	100K Ω
R2197	ERJ3EKF6802V	SMD	0.1W	1%	68K Ω
R2198	ERJ3EKF1583V	SMD	0.1W	1%	158K Ω
R2204	ERJ3GEYJ333V	SMD	0.1W	5%	33K Ω
R2205	ERJ2GEJ203X	SMD	.063W	5%	20K Ω
R2206	ERJ2GEJ103X	SMD	.063W	5%	10K Ω
R2208	ERJ2GEJ103X	SMD	.063W	5%	10K Ω
R2209	ERJ2GEJ103X	SMD	.063W	5%	10K Ω
R2210	ERJ2GEJ103X	SMD	.063W	5%	10K Ω
R2216	ERJ2GEJ103X	SMD	.063W	5%	10K Ω
R2217	ERJ2GEJ473X	SMD	.063W	5%	47K Ω
R2223	ERJ2GE0R00X	SMD	.063W	-	0 Ω
R2224	ERJ2GE0R00X	SMD	.063W	-	0 Ω
R2233	ERJ2GEJ103X	SMD	.063W	5%	10K Ω
R2234	ERJ2GEJ330X	SMD	.063W	5%	33 Ω
R2235	ERJ2GEJ473X	SMD	.063W	5%	47K Ω
R2236	ERJ3GEYJ153V	S.M.CARB	0.1W	5%	15K Ω
R2237	ERJ3GEYJ153V	S.M.CARB	0.1W	5%	15K Ω
R2238	ERJ2GEJ473X	SMD	.063W	5%	47K Ω
R2244	ERJ3GEYJ102	SMD	0.1W	5%	1K Ω
R2250	ERJ2GE0R00X	SMD	.063W	-	0 Ω
R2252	ERJ2GEJ330X	SMD	.063W	5%	33 Ω
R2253	ERJ2GEJ330X	SMD	.063W	5%	33 Ω
R2254	ERJ2GEJ330X	SMD	.063W	5%	33 Ω
R2257	ERJ2GE0R00X	SMD	.063W	-	0 Ω
R2265	ERJ3GEYJ472	SMD	0.1W	5%	4K7 Ω
R2266	ERJ3GEYJ561	SMD	0.1W	5%	560 Ω
R2271	EXB28V220JX	SMD	.031W	5%	22 Ω
R2276	ERJ2GEJ103X	SMD	.063W	5%	10K Ω
R2296	ERJ2GE0R00X	SMD	.063W	-	0 Ω
R2297	ERJ2GE0R00X	SMD	.063W	-	0 Ω
R2301	ERJ2GEJ222X	SMD	.063W	5%	2K2 Ω
R2302	ERJ2GEJ222X	SMD	.063W	5%	2K2 Ω
R2305	ERJ2GEJ471X	SMD	.063W	5%	470 Ω
R2306	ERJ2GEJ683X	SMD	.063W	5%	68K Ω
R2308	ERJ8GEYJ3R3V	SMD	0.25W	5%	3R3 Ω
R2310	ERJ8GEYJ470V	SMD	0.25W	5%	47 Ω
R2311	ERJ8GEYJ3R3V	SMD	0.25W	5%	3R3 Ω
R2313	ERJ8GEYJ3R3V	SMD	0.25W	5%	3R3 Ω
R2315	ERJ8GEYJ3R3V	SMD	0.25W	5%	3R3 Ω
R2317	ERJ6GEYJ100	S.M.CARB	0.1W	5%	10 Ω
R2319	ERJ6GEYJ100	S.M.CARB	0.1W	5%	10 Ω
R2321	ERJ6GEYJ100	S.M.CARB	0.1W	5%	10 Ω
R2323	ERJ6GEYJ100	S.M.CARB	0.1W	5%	10 Ω
R2325	ERJ6GEYJ100	S.M.CARB	0.1W	5%	10 Ω
R2330	ERJ2GEJ102X	SMD	.063W	5%	1K Ω
R2331	ERJ2GEJ222X	SMD	.063W	5%	2K2 Ω

Cct Ref	Parts Number	Description			
R2624	ERJ2GEJ220X	SMD	.063W	5%	22 Ω
R2625	ERJ2GEJ220X	SMD	.063W	5%	22 Ω
R2628	ERJ2GEJ682X	SMD	.063W	5%	6K8 Ω
R2629	ERJ2GEJ682X	SMD	.063W	5%	6K8 Ω
R2647	ERJ6GEY0R00	S.M.CARB	0.1W	-	0 Ω
R2853	ERJ2GEJ103X	SMD	.063W	5%	10K Ω
R2854	ERJ2GEJ222X	SMD	.063W	5%	2K2 Ω
R2855	ERJ2GEJ473X	SMD	.063W	5%	47K Ω
R2857	ERJ2GEJ472X	SMD	.063W	5%	4K7 Ω
R2858	ERJ2GEJ222X	SMD	.063W	5%	2K2 Ω
R2859	ERJ2GEJ472X	SMD	.063W	5%	4K7 Ω
R2860	ERJ2GEJ103X	SMD	.063W	5%	10K Ω
R2861	ERJ2GEJ102X	SMD	.063W	5%	1K Ω
R2863	ERJ2GEJ102X	SMD	.063W	5%	1K Ω
R2864	ERJ2GEJ102X	SMD	.063W	5%	1K Ω
R2865	ERJ2GEJ103X	SMD	.063W	5%	10K Ω
R2866	ERJ2GEJ222X	SMD	.063W	5%	2K2 Ω
R2867	ERJ6ENF8202V	SMD	.125W	1%	82K Ω
R2868	ERJ6ENF1602V	SMD	.125W	1%	16K Ω
R2869	ERJ2GEJ472X	SMD	.063W	5%	4K7 Ω
R2890	ERJ2GEJ104X	SMD	.063W	5%	100K Ω
R3001	ERJ6ENF1500	SMD	.125W	1%	150 Ω
R3002	ERJ6ENF1500	SMD	.125W	1%	150 Ω
R3003	ERJ6ENF1500	SMD	.125W	1%	150 Ω
R3004	ERJ6ENF1500	SMD	.125W	1%	150 Ω
R3005	ERJ6ENF1500	SMD	.125W	1%	150 Ω
R3006	ERJ6ENF1500	SMD	.125W	1%	150 Ω
R3007	ERJ6GEYJ680	S.M.CARB	0.1W	5%	68 Ω
R3008	ERJ6ENF1500	SMD	.125W	1%	150 Ω
R3009	ERJ6ENF1500	SMD	.125W	1%	150 Ω
R3010	ERJ6ENF1500	SMD	.125W	1%	150 Ω
R3011	ERJ6ENF1500	SMD	.125W	1%	150 Ω
R3013	ERJ6ENF75R0	SMD	.125W	1%	75 Ω
R3014	ERJ6ENF75R0	SMD	.125W	1%	75 Ω
R3015	ERJ6ENF75R0	SMD	.125W	1%	75 Ω
R3017	EXB28VR000X	SMD	0W	-	0 Ω
R3018	EXB28VR000X	SMD	0W	-	0 Ω
R3020	ERJ6ENF2152V	SMD	.125W	1%	21K5 Ω
R3021	ERJ6ENF2152V	SMD	.125W	1%	21K5 Ω
R3023	ERJ6ENF1302	S.M.CARB	0.1W	1%	13K Ω
R3027	ERJ6ENF1500	SMD	.125W	1%	150 Ω
R3028	ERJ6ENF1500	SMD	.125W	1%	150 Ω
R3031	ERJ3GEY0R00	SMD	0.1W	-	0 Ω
R3032	ERJ3GEY0R00	SMD	0.1W	-	0 Ω
R3033	ERJ6ENF1500	SMD	.125W	1%	150 Ω
R3036	ERJ6ENF1500	SMD	.125W	1%	150 Ω
R3038	ERJ2GE0R00X	SMD	.063W	-	0 Ω
R3040	ERJ2GE0R00X	SMD	.063W	-	0 Ω
R3059	ERJ2GEJ221X	SMD	.063W	5%	220 Ω
R3060	ERJ2GEJ221X	SMD	.063W	5%	220 Ω
R3061	ERJ2GEJ221X	SMD	.063W	5%	220 Ω
R3062	ERJ2GEJ221X	SMD	.063W	5%	220 Ω
R3063	ERJ2GEJ221X	SMD	.063W	5%	220 Ω
R3064	ERJ2GEJ221X	SMD	.063W	5%	220 Ω
R3068	ERJ6ENF75R0	SMD	.125W	1%	75 Ω
R3072	ERJ2GEJ221X	SMD	.063W	5%	220 Ω
R3073	ERJ2GEJ221X	SMD	.063W	5%	220 Ω
R3087	ERJ2GEJ221X	SMD	.063W	5%	220 Ω
R3088	ERJ2GEJ221X	SMD	.063W	5%	220 Ω
R3089	ERJ2GEJ331X	SMD	.063W	5%	330 Ω
R3090	ERJ2GEJ220X	SMD	.063W	5%	22 Ω
R3092	ERJ2GEJ680X	SMD	.063W	5%	68 Ω
R3094	ERJ2GEJ680X	SMD	.063W	5%	68 Ω
R3095	ERJ2GEJ680X	SMD	.063W	5%	68 Ω
R3096	ERJ2GEJ221X	SMD	.063W	5%	220 Ω
R3097	ERJ2GEJ221X	SMD	.063W	5%	220 Ω
R3098	ERJ2GEJ221X	SMD	.063W	5%	220 Ω
R3099	ERJ2GEJ221X	SMD	.063W	5%	220 Ω

Cct Ref	Parts Number	Description			
R3100	ERJ2GEJ221X	SMD	.063W	5%	220 Ω
R3101	ERJ2GEJ221X	SMD	.063W	5%	220 Ω
R3102	ERJ2GEJ103X	SMD	.063W	5%	10K Ω
R3104	ERJ2GEJ103X	SMD	.063W	5%	10K Ω
R3109	ERJ3GEY0R00	SMD	0.1W	-	0 Ω
R3110	ERJ3GEY0R00	SMD	0.1W	-	0 Ω
R3111	ERJ2GEJ473X	SMD	.063W	5%	47K Ω
R3112	ERJ2GEJ473X	SMD	.063W	5%	47K Ω
R3113	ERJ2GEJ473X	SMD	.063W	5%	47K Ω
R3114	ERJ6GEYJ680	S.M.CARB	0.1W	5%	68 Ω
R3121	ERJ2GEJ470X	SMD	.063W	5%	47 Ω
R3123	ERJ2GEJ470X	SMD	.063W	5%	47 Ω
R3130	ERJ3GEYJ221	SMD	0.1W	5%	220 Ω
R3131	ERJ3GEYJ221	SMD	0.1W	5%	220 Ω
R3133	ERJ2GEJ473X	SMD	.063W	5%	47K Ω
R3137	ERJ3EKF1000V	SMD	0.1W	1%	100 Ω
R3140	ERJ2GEJ470X	SMD	.063W	5%	47 Ω
R3143	ERJ6ENF63R4V	SMD	.125W	1%	63R4 Ω
R3144	ERJ2GEJ221X	SMD	.063W	5%	220 Ω
R3145	ERJ2GEJ104X	SMD	.063W	5%	100K Ω
R3146	ERJ3GEYJ102	SMD	0.1W	5%	1K Ω
R3149	ERJ3GEYJ102	SMD	0.1W	5%	1K Ω
R3150	ERJ6ENF63R4V	SMD	.125W	1%	63R4 Ω
R3151	ERJ2GEJ221X	SMD	.063W	5%	220 Ω
R3152	ERJ2GEJ104X	SMD	.063W	5%	100K Ω
R3153	ERJ3GEYJ102	SMD	0.1W	5%	1K Ω
R3154	ERJ3GEYJ102	SMD	0.1W	5%	1K Ω
R3163	ERJ6ENF1302	S.M.CARB	0.1W	1%	13K Ω
R3173	ERJ6ENF1500	SMD	.125W	1%	150 Ω
R3174	ERJ2GEJ680X	SMD	.063W	5%	68 Ω
R3175	ERJ2GEJ680X	SMD	.063W	5%	68 Ω
R3176	ERJ2GEJ680X	SMD	.063W	5%	68 Ω
R3177	ERJ2GEJ103X	SMD	.063W	5%	10K Ω
R3178	ERJ6ENF1500	SMD	.125W	1%	150 Ω
R3179	ERJ2GEJ101X	SMD	.063W	5%	100 Ω
R3180	ERJ2GEJ101X	SMD	.063W	5%	100 Ω
R3187	ERJ6ENF1500	SMD	.125W	1%	150 Ω
R3191	ERJ2GEJ220X	SMD	.063W	5%	22 Ω
R3192	ERJ6ENF1500	SMD	.125W	1%	150 Ω
R3193	ERJ6ENF1500	SMD	.125W	1%	150 Ω
R3194	ERJ6ENF1500	SMD	.125W	1%	150 Ω
R3213	ERJ2GE0R00X	SMD	.063W	-	0 Ω
R3214	ERJ2GE0R00X	SMD	.063W	-	0 Ω
R3233	ERJ6ENF75R0	SMD	.125W	1%	75 Ω
R3234	ERJ6ENF75R0	SMD	.125W	1%	75 Ω
R3239	ERJ2GEJ221X	SMD	.063W	5%	220 Ω
R3240	ERJ3EKF5600V	SMD	0.1W	1%	560 Ω
R3243	ERJ6GEYJ271	S.M.CARB	0.1W	5%	270 Ω
R3244	ERJ2GEJ220X	SMD	.063W	5%	22 Ω
R3246	ERJ2GEJ220X	SMD	.063W	5%	22 Ω
R3247	ERJ2GEJ221X	SMD	.063W	5%	220 Ω
R3273	ERJ2GE0R00X	SMD	.063W	-	0 Ω
R3274	ERJ2GE0R00X	SMD	.063W	-	0 Ω
R3275	ERJ2GEJ104X	SMD	.063W	5%	100K Ω
R3302	ERJ6GEYJ101	S.M.CARB	0.1W	5%	100 Ω
R3305	ERJ6GEYJ101	S.M.CARB	0.1W	5%	100 Ω
R3306	ERJ6GEYJ472	S.M.CARB	0.1W	5%	4K7 Ω
R3307	ERJ6GEYJ472	S.M.CARB	0.1W	5%	4K7 Ω
R3308	ERJ6GEY0R00	S.M.CARB	0.1W	-	0 Ω
R3309	ERJ6GEY0R00	S.M.CARB	0.1W	-	0 Ω
R3310	ERJ6ENF75R0	SMD	.125W	1%	75 Ω
R3312	ERJ2GEJ473X	SMD	.063W	5%	47K Ω
R3313	ERJ6ENF75R0	SMD	.125W	1%	75 Ω
R3318	ERJ6ENF75R0	SMD	.125W	1%	75 Ω
R3348	ERJ2GEJ680X	SMD	.063W	5%	68 Ω
R3349	ERJ2GEJ680X	SMD	.063W	5%	68 Ω
R3350	ERJ2GEJ101X	SMD	.063W	5%	100 Ω
R3700	ERJ6GEYJ393	S.M.CARB	0.1W	5%	39K Ω

Cct Ref	Parts Number	Description			
R3701	ERJ6GEYJ393	S.M.CARB	0.1W	5%	39K Ω
R3702	ERJ6GEYJ184	S.M.CARB	0.1W	5%	180K Ω
R3703	ERJ6GEYJ184	S.M.CARB	0.1W	5%	180K Ω
R3851	ERJ6RBD152V	SMD	0.1W	0.5	1K5 Ω
R3852	ERJ6RBD123V	SMD	0.1W	0.5	12K Ω
R3853	ERJ6RBD622V	SMD	0.1W	0.5	6K2 Ω
R3854	ERJ6RBD152V	SMD	0.1W	0.5	1K5 Ω
R3855	ERJ6RBD123V	SMD	0.1W	0.5	12K Ω
R3856	ERJ6RBD132V	SMD	0.1W	0.5	1K3 Ω
R3857	ERJ6GEY0R00	S.M.CARB	0.1W	-	0 Ω
R3858	ERJ6GEY0R00	S.M.CARB	0.1W	-	0 Ω
R3859	ERJ6GEYJ683	S.M.CARB	0.1W	5%	68K Ω
R3860	ERJ6GEYJ473	S.M.CARB	0.1W	5%	47K Ω
R3861	ERJ6GEYJ683	S.M.CARB	0.1W	5%	68K Ω
R3862	ERJ6GEYJ473	S.M.CARB	0.1W	5%	47K Ω
R3863	ERJ6GEYJ223	S.M.CARB	0.1W	5%	22K Ω
R3864	ERJ6GEYJ103	S.M.CARB	0.1W	5%	10K Ω
R3865	ERJ6GEYJ223	S.M.CARB	0.1W	5%	22K Ω
R3868	ERJ6GEYJ103	S.M.CARB	0.1W	5%	10K Ω
R3871	ERJ3GEYJ103	SMD	0.1W	5%	10K Ω
R3872	ERJ3GEYJ223V	S.M.CARB	0.1W	5%	22K Ω
R3874	ERJ3GEYJ222	SMD	0.1W	5%	2K2 Ω
R3876	ERJ3GEYJ472	SMD	0.1W	5%	4K7 Ω
R3877	ERJ3GEYJ222	SMD	0.1W	5%	2K2 Ω
R3878	ERJ3GEYJ102	SMD	0.1W	5%	1K Ω
R3879	ERJ6RBD202V	SMD	0.1W	0.5	2K Ω
R3880	ERJ3GEYJ563V	S.M.CARB	0.1W	5%	56K Ω
R3881	ERJ6RBD622V	SMD	0.1W	0.5	6K2 Ω
R3882	ERJ3GEYJ563V	S.M.CARB	0.1W	5%	56K Ω
R3883	ERJ3GEYJ563V	S.M.CARB	0.1W	5%	56K Ω
R3884	ERJ3GEYJ563V	S.M.CARB	0.1W	5%	56K Ω
R3885	ERJ6GEY0R00	S.M.CARB	0.1W	-	0 Ω
R3886	ERJ3GEYJ563V	S.M.CARB	0.1W	5%	56K Ω
R3887	ERJ6GEYJ683	S.M.CARB	0.1W	5%	68K Ω
R3888	ERJ6GEYJ473	S.M.CARB	0.1W	5%	47K Ω
R3889	ERJ6RBD152V	SMD	0.1W	0.5	1K5 Ω
R3890	ERJ6GEYJ223	S.M.CARB	0.1W	5%	22K Ω
R3891	ERJ6RBD822	SMD	0.1W	0.5	8K2 Ω
R3892	ERJ6RBD132V	SMD	0.1W	0.5	1K3 Ω
R3893	ERJ6GEYJ103	S.M.CARB	0.1W	5%	10K Ω
R3895	ERJ6GEY0R00	S.M.CARB	0.1W	-	0 Ω
R3896	ERJ6GEYJ103	S.M.CARB	0.1W	5%	10K Ω
R3897	ERJ6GEYJ223	S.M.CARB	0.1W	5%	22K Ω
R3898	ERJ6GEYJ683	S.M.CARB	0.1W	5%	68K Ω
R3899	ERJ6GEYJ473	S.M.CARB	0.1W	5%	47K Ω
R4001	ERJ2GEJ103X	SMD	.063W	5%	10K Ω
R4274	ERJ2GEJ103X	SMD	.063W	5%	10K Ω
R4279	ERJ2GEJ102X	SMD	.063W	5%	1K Ω
R4281	ERJ2GEJ103X	SMD	.063W	5%	10K Ω
R4283	ERJ2GEJ302X	SMD	.063W	5%	3K Ω
R4284	ERJ2GEJ103X	SMD	.063W	5%	10K Ω
R4286	ERJ2GEJ473X	SMD	.063W	5%	47K Ω
R4287	ERJ2GEJ473X	SMD	.063W	5%	47K Ω
R4288	ERJ2GEJ473X	SMD	.063W	5%	47K Ω
R4315	ERJ2GE0R00X	SMD	.063W	-	0 Ω
R4316	ERJ2GE0R00X	SMD	.063W	-	0 Ω
R4322	ERJ2GEJ473X	SMD	.063W	5%	47K Ω
R4323	ERJ2GEJ473X	SMD	.063W	5%	47K Ω
R4325	ERJ2GEJ473X	SMD	.063W	5%	47K Ω
R4326	ERJ2GEJ473X	SMD	.063W	5%	47K Ω
R4327	ERJ2GEJ473X	SMD	.063W	5%	47K Ω
R4328	ERJ2GEJ473X	SMD	.063W	5%	47K Ω
R4330	ERJ2GEJ473X	SMD	.063W	5%	47K Ω
R4500	ERJ2GEJ103X	SMD	.063W	5%	10K Ω
R4501	ERJ2GEJ103X	SMD	.063W	5%	10K Ω
R4502	ERJ2GEJ330X	SMD	.063W	5%	33 Ω
R4503	ERJ2GEJ330X	SMD	.063W	5%	33 Ω
R4506	ERJ2GEJ103X	SMD	.063W	5%	10K Ω

Cct Ref	Parts Number	Description			
R4507	ERJ2GEJ103X	SMD	.063W	5%	10K Ω
R4508	ERJ2GEJ2R2X	SMD	.063W	5%	2.2 Ω
R4509	ERJ2GEJ2R2X	SMD	.063W	5%	2.2 Ω
R4510	ERJ2GEJ2R2X	SMD	.063W	5%	2.2 Ω
R4511	ERJ2GEJ2R2X	SMD	.063W	5%	2.2 Ω
R4512	ERJ2GEJ2R2X	SMD	.063W	5%	2.2 Ω
R4513	ERJ2GEJ2R2X	SMD	.063W	5%	2.2 Ω
R4514	ERJ2GEJ2R2X	SMD	.063W	5%	2.2 Ω
R4515	ERJ2GEJ2R2X	SMD	.063W	5%	2.2 Ω
R4516	ERJ2GEJ2R2X	SMD	.063W	5%	2.2 Ω
R4517	ERJ2GEJ2R2X	SMD	.063W	5%	2.2 Ω
R4518	ERJ2GEJ2R2X	SMD	.063W	5%	2.2 Ω
R4519	ERJ2GEJ2R2X	SMD	.063W	5%	2.2 Ω
R4520	ERJ2GEJ2R2X	SMD	.063W	5%	2.2 Ω
R4521	ERJ2GEJ2R2X	SMD	.063W	5%	2.2 Ω
R4522	ERJ2GEJ2R2X	SMD	.063W	5%	2.2 Ω
R4523	ERJ2GEJ2R2X	SMD	.063W	5%	2.2 Ω
R4524	ERJ2GEJ103X	SMD	.063W	5%	10K Ω
R4525	ERJ2GEJ103X	SMD	.063W	5%	10K Ω
R4526	ERJ2GEJ102X	SMD	.063W	5%	1K Ω
R4527	ERJ2GEJ102X	SMD	.063W	5%	1K Ω
R4528	ERJ2GEJ103X	SMD	.063W	5%	10K Ω
R4529	ERJ2GEJ472X	SMD	.063W	5%	4K7 Ω
R4530	ERJ2GEJ103X	SMD	.063W	5%	10K Ω
R4531	ERJ2GEJ472X	SMD	.063W	5%	4K7 Ω
R4532	ERJ2GEJ103X	SMD	.063W	5%	10K Ω
R4533	ERJ2GEJ103X	SMD	.063W	5%	10K Ω
R4535	ERJ2GEJ472X	SMD	.063W	5%	4K7 Ω
R4536	ERJ2GEJ472X	SMD	.063W	5%	4K7 Ω
R4538	ERJ2GEJ473X	SMD	.063W	5%	47K Ω
R4539	ERJ2GEJ680X	SMD	.063W	5%	68 Ω
R4540	ERJ2GEJ473X	SMD	.063W	5%	47K Ω
R4541	ERJ2GEJ680X	SMD	.063W	5%	68 Ω
R4542	ERJ2GEJ680X	SMD	.063W	5%	68 Ω
R4543	ERJ2GEJ680X	SMD	.063W	5%	68 Ω
R4544	ERJ2GEJ103X	SMD	.063W	5%	10K Ω
R4545	ERJ2GEJ103X	SMD	.063W	5%	10K Ω
R4546	ERJ2GEJ103X	SMD	.063W	5%	10K Ω
R4547	ERJ2GEJ103X	SMD	.063W	5%	10K Ω
R4548	ERJ2GEJ472X	SMD	.063W	5%	4K7 Ω
R4549	ERJ2GEJ472X	SMD	.063W	5%	4K7 Ω
R4552	ERJ2GEJ220X	SMD	.063W	5%	22 Ω
R4561	ERJ2GEJ472X	SMD	.063W	5%	4K7 Ω
R4562	ERJ2GEJ472X	SMD	.063W	5%	4K7 Ω
R4563	ERJ2GEJ472X	SMD	.063W	5%	4K7 Ω
R4564	ERJ2GEJ220X	SMD	.063W	5%	22 Ω
R4565	ERJ2GEJ220X	SMD	.063W	5%	22 Ω
R4585	ERJ2GEJ101X	SMD	.063W	5%	100 Ω
R4587	ERJ3EKF8200V	SMD	0.1W	1%	820 Ω
R4593	ERJ3EKF1101V	SMD	0.1W	1%	1K1 Ω
R4596	ERJ6GEYJ102	S.M.CARB	0.1W	5%	1K Ω
R4597	ERJ6GEYJ102	S.M.CARB	0.1W	5%	1K Ω
R4598	ERJ6GEYJ102	S.M.CARB	0.1W	5%	1K Ω
R4601	ERJ6GEYJ102	S.M.CARB	0.1W	5%	1K Ω
R4604	ERJ3EKF7501V	SMD	0.1W	1%	7K5 Ω
R4605	ERJ3EKF1201V	SMD	0.1W	1%	1K2 Ω
R4606	ERJ3EKF4701V	SMD	0.1W	1%	4K7 Ω
R4608	ERJ6GEYJ102	S.M.CARB	0.1W	5%	1K Ω
R4609	ERJ2GEJ103X	SMD	.063W	5%	10K Ω
R4611	ERJ3EKF1371V	SMD	0.1W	1%	1K37 Ω
R4612	ERJ3EKF1501V	SMD	0.1W	1%	1K5 Ω
R4613	ERJ2GEJ220X	SMD	.063W	5%	22 Ω
R4614	ERJ2GEJ220X	SMD	.063W	5%	22 Ω
R4615	ERJ3EKF1600V	SMD	0.1W	1%	160 Ω
R4616	ERJ2GE0R00X	SMD	.063W	-	0 Ω
R4617	ERJ2GE0R00X	SMD	.063W	-	0 Ω
R4618	ERJ2GE0R00X	SMD	.063W	-	0 Ω
R4619	ERJ2GE0R00X	SMD	.063W	-	0 Ω

Cct Ref	Parts Number	Description			
R4622	ERJ2GEJ101X	SMD	.063W	5%	100 Ω
R4624	ERJ3EKF1691V	SMD	0.1W	1%	1K69 Ω
R4626	ERJ2GEJ105X	SMD	.063W	5%	1M Ω
R4627	ERJ2GE0R00X	SMD	.063W	-	0 Ω
R4631	ERJ3EKF4990V	SMD	0.1W	1%	499 Ω
R4635	EXB28V680JX	SMD	.031W	5%	68 Ω
R4636	ERJ2GEJ680X	SMD	.063W	5%	68 Ω
R4637	ERJ2GEJ680X	SMD	.063W	5%	68 Ω
R4638	ERJ2GEJ680X	SMD	.063W	5%	68 Ω
R4639	EXB28V680JX	SMD	.031W	5%	68 Ω
R4640	EXB28V680JX	SMD	.031W	5%	68 Ω
R4641	ERJ2GEJ220X	SMD	.063W	5%	22 Ω
R4642	EXB28V680JX	SMD	.031W	5%	68 Ω
R4643	ERJ2GEJ220X	SMD	.063W	5%	22 Ω
R4644	ERJ2GEJ220X	SMD	.063W	5%	22 Ω
R4645	ERJ2GEJ680X	SMD	.063W	5%	68 Ω
R4646	ERJ2GEJ680X	SMD	.063W	5%	68 Ω
R4647	ERJ2GEJ680X	SMD	.063W	5%	68 Ω
R4648	EXB28V330JX	SMD	.031W	5%	33 Ω
R4649	EXB28V680JX	SMD	.031W	5%	68 Ω
R4650	ERJ2GEJ680X	SMD	.063W	5%	68 Ω
R4651	ERJ2GEJ680X	SMD	.063W	5%	68 Ω
R4652	ERJ2GEJ473X	SMD	.063W	5%	47K Ω
R4653	ERJ2GEJ103X	SMD	.063W	5%	10K Ω
R4654	ERJ3EKF4701V	SMD	0.1W	1%	4K7 Ω
R4655	ERJ2GEJ101X	SMD	.063W	5%	100 Ω
R4656	ERJ2GEJ222X	SMD	.063W	5%	2K2 Ω
R4657	ERJ2GEJ220X	SMD	.063W	5%	22 Ω
R4658	ERJ2GEJ220X	SMD	.063W	5%	22 Ω
R4661	ERJ2GEJ101X	SMD	.063W	5%	100 Ω
R4664	ERJ3EKF6980V	SMD	0.1W	1%	698 Ω
R4665	ERJ2GEJ473X	SMD	.063W	5%	47K Ω
R4666	ERJ2GEJ473X	SMD	.063W	5%	47K Ω
R4670	ERJ2GEJ680X	SMD	.063W	5%	68 Ω
R4682	ERJ3EKF1002V	SMD	0.1W	1%	10K Ω
R4683	ERJ2GEJ103X	SMD	.063W	5%	10K Ω
R4691	ERJ2GEJ220X	SMD	.063W	5%	22 Ω
R4692	ERJ2GEJ220X	SMD	.063W	5%	22 Ω
R4706	ERJ2GEJ102X	SMD	.063W	5%	1K Ω
R4707	ERJ2GEJ103X	SMD	.063W	5%	10K Ω
R4708	ERJ2GEJ102X	SMD	.063W	5%	1K Ω
R4804	ERJ2GEJ103X	SMD	.063W	5%	10K Ω
R4805	ERJ2GEJ103X	SMD	.063W	5%	10K Ω
R4806	ERJ2GEJ103X	SMD	.063W	5%	10K Ω
R4807	ERJ2GEJ103X	SMD	.063W	5%	10K Ω
R4808	ERJ2GEJ103X	SMD	.063W	5%	10K Ω
R4809	ERJ2GEJ102X	SMD	.063W	5%	1K Ω
R4810	ERJ2GEJ103X	SMD	.063W	5%	10K Ω
R4811	ERJ2GEJ103X	SMD	.063W	5%	10K Ω
R4812	ERJ2GEJ103X	SMD	.063W	5%	10K Ω
R4813	ERJ6ENF6041	SMD	.125W	1%	6K04 Ω
R4814	ERJ2GEJ103X	SMD	.063W	5%	10K Ω
R4815	ERJ2GEJ102X	SMD	.063W	5%	1K Ω
R4816	ERJ6ENF5111V	SMD	.125W	1%	5K11 Ω
R4817	D1BA3901A026	SMD	.063W	1%	3K9 Ω
R4818	D1BA3001A026	SMD	.063W	1%	3K Ω
R4819	ERJ2GEJ220X	SMD	.063W	5%	22 Ω
R4820	ERJ2GEJ220X	SMD	.063W	5%	22 Ω
R4856	ERJ2GE0R00X	SMD	.063W	-	0 Ω
R4864	ERJ2GEJ222X	SMD	.063W	5%	2K2 Ω
R4866	ERJ2GEJ821X	SMD	.063W	5%	820 Ω
R5531	ERJ2GEJ222X	SMD	.063W	5%	2K2 Ω
R5532	ERJ2GEJ472X	SMD	.063W	5%	4K7 Ω
R5533	ERJ2GEJ103X	SMD	.063W	5%	10K Ω
R5534	ERJ2GEJ473X	SMD	.063W	5%	47K Ω
R5535	ERJ2GEJ222X	SMD	.063W	5%	2K2 Ω
R5536	ERJ2GEJ472X	SMD	.063W	5%	4K7 Ω
R5537	ERJ2GEJ681X	SMD	.063W	5%	680 Ω

Cct Ref	Parts Number	Description			
R5538	ERJ2GEJ222X	SMD	.063W	5%	2K2 Ω
R5542	ERJ6GEYJ471	S.M.CARB	0.1W	5%	470 Ω
R5544	ERJ3GEYJ221	SMD	0.1W	5%	220 Ω
R5546	ERJ2GEJ103X	SMD	.063W	5%	10K Ω
R5547	ERJ2GEJ103X	SMD	.063W	5%	10K Ω
R5548	ERJ2GEJ472X	SMD	.063W	5%	4K7 Ω
R5549	ERJ2GEJ472X	SMD	.063W	5%	4K7 Ω
R5570	ERJ2GEJ103X	SMD	.063W	5%	10K Ω
R5571	ERJ2GEJ473X	SMD	.063W	5%	47K Ω
R5572	ERJ2GEJ222X	SMD	.063W	5%	2K2 Ω
R5573	ERJ2GEJ472X	SMD	.063W	5%	4K7 Ω
R5600	ERJ2GEJ680X	SMD	.063W	5%	68 Ω
R5604	ERJ3EKF4702V	SMD	0.1W	1%	47K Ω
R5605	ERJ3EKF1242V	SMD	0.1W	1%	12K4 Ω
R5606	ERJ2GE0R00X	SMD	.063W	-	0 Ω
R5607	ERJ2GE0R00X	SMD	.063W	-	0 Ω
R5608	ERJ2GE0R00X	SMD	.063W	-	0 Ω
R5609	ERJ2GE0R00X	SMD	.063W	-	0 Ω
R5610	ERJ2GEJ104X	SMD	.063W	5%	100K Ω
R5611	ERJ3EKF3602V	SMD	0.1W	1%	36K Ω
R5612	ERJ3EKF2322V	SMD	0.1W	1%	23K2 Ω
R5620	ERJ2GEJ680X	SMD	.063W	5%	68 Ω
R5621	ERJ3EKF4702V	SMD	0.1W	1%	47K Ω
R5622	ERJ2GEJ104X	SMD	.063W	5%	100K Ω
R5623	ERJ3EKF4702V	SMD	0.1W	1%	47K Ω
R5625	ERJ2GE0R00X	SMD	.063W	-	0 Ω
R5626	ERJ2GE0R00X	SMD	.063W	-	0 Ω
R5627	ERJ2GE0R00X	SMD	.063W	-	0 Ω
R5628	ERJ2GE0R00X	SMD	.063W	-	0 Ω
R5629	ERJ3EKF2802V	SMD	0.1W	1%	28K Ω
R5630	ERJ3EKF4752V	SMD	0.1W	1%	47K5 Ω
R5631	ERJ3EKF3602V	SMD	0.1W	1%	36K Ω
R5632	ERJ3EKF3002V	SMD	0.1W	1%	30K Ω
R5633	ERJ3EKF1602V	SMD	0.1W	1%	16K Ω
R5634	ERJ3EKF1602V	SMD	0.1W	1%	16K Ω
R5635	ERJ2GEJ223X	SMD	.063W	5%	22K Ω
R5636	ERJ2GEJ683X	SMD	.063W	5%	68K Ω
R5637	ERJ2GE0R00X	SMD	.063W	-	0 Ω
R5638	ERJ2GEJ103X	SMD	.063W	5%	10K Ω
R5641	ERJ2GEJ473X	SMD	.063W	5%	47K Ω
R5644	ERJ2GEJ222X	SMD	.063W	5%	2K2 Ω
R5646	ERJ2GEJ103X	SMD	.063W	5%	10K Ω
R5647	ERJ2GEJ473X	SMD	.063W	5%	47K Ω
R5660	ERJ2GEJ562X	SMD	.063W	5%	5K6 Ω
R5661	ERJ2GEJ473X	SMD	.063W	5%	47K Ω
R5662	ERJ2GEJ103X	SMD	.063W	5%	10K Ω
R5670	ERJ2GE0R00X	SMD	.063W	-	0 Ω
R5671	ERJ2GEJ183X	SMD	.063W	5%	18K Ω
R5672	ERJ2GE0R00X	SMD	.063W	-	0 Ω
R5674	ERJ2GEJ472X	SMD	.063W	5%	4K7 Ω
R5690	ERJ2GEJ103X	SMD	.063W	5%	10K Ω
R5691	ERJ2GEJ103X	SMD	.063W	5%	10K Ω
R5692	ERJ2GEJ473X	SMD	.063W	5%	47K Ω
R5693	ERJ2GEJ473X	SMD	.063W	5%	47K Ω
R5694	ERJ2GEJ102X	SMD	.063W	5%	1K Ω
R5695	ERJ2GEJ102X	SMD	.063W	5%	1K Ω
R5696	ERJ2GEJ103X	SMD	.063W	5%	10K Ω
R5697	ERJ2GEJ103X	SMD	.063W	5%	10K Ω
R5730	ERJ2GEJ473X	SMD	.063W	5%	47K Ω
R5731	ERJ2GEJ473X	SMD	.063W	5%	47K Ω
R5732	ERJ2GEJ682X	SMD	.063W	5%	6K8 Ω
R8001	ERJ2GEJ181X	SMD	.063W	5%	180 Ω
R8002	ERJ2GEJ820X	SMD	.063W	5%	82 Ω
R8004	ERJ3EKF2402V	SMD	0.1W	1%	24K Ω
R8005	ERJ3EKF1002V	SMD	0.1W	1%	10K Ω
R8006	ERJ3EKF6801V	SMD	0.1W	1%	6K8 Ω
R8023	ERJ2GE0R00X	SMD	.063W	-	0 Ω
R8024	ERJ2GE0R00X	SMD	.063W	-	0 Ω

Cct Ref	Parts Number	Description			
R8025	ERJ2GE0R00X	SMD	.063W	-	0 Ω
R8026	ERJ2GE0R00X	SMD	.063W	-	0 Ω
R8027	ERJ2GE0R00X	SMD	.063W	-	0 Ω
R8028	ERJ2GE0R00X	SMD	.063W	-	0 Ω
R8029	ERJ2GE0R00X	SMD	.063W	-	0 Ω
R8030	ERJ2GEJ101X	SMD	.063W	5%	100 Ω
R8031	ERJ3EKF2700V	SMD	0.1W	1%	270 Ω
R8032	ERJ3EKF2700V	SMD	0.1W	1%	270 Ω
R8035	ERJ2GE0R00X	SMD	.063W	-	0 Ω
R8036	ERJ3GEY0R00	SMD	0.1W	-	0 Ω
R8039	ERJ2GE0R00X	SMD	.063W	-	0 Ω
R8056	ERJ2GEJ470X	SMD	.063W	5%	47 Ω
R8057	ERJ2GEJ470X	SMD	.063W	5%	47 Ω
R8058	ERJ2GEJ470X	SMD	.063W	5%	47 Ω
R8059	ERJ2GEJ470X	SMD	.063W	5%	47 Ω
R8060	ERJ2GEJ470X	SMD	.063W	5%	47 Ω
R8061	ERJ2GEJ470X	SMD	.063W	5%	47 Ω
R8062	ERJ2GEJ470X	SMD	.063W	5%	47 Ω
R8063	ERJ2GEJ470X	SMD	.063W	5%	47 Ω
R8064	ERJ2GEJ470X	SMD	.063W	5%	47 Ω
R8065	ERJ2GEJ470X	SMD	.063W	5%	47 Ω
R8066	ERJ2GEJ470X	SMD	.063W	5%	47 Ω
R8067	ERJ2GEJ470X	SMD	.063W	5%	47 Ω
R8068	ERJ2GEJ470X	SMD	.063W	5%	47 Ω
R8069	ERJ2GEJ470X	SMD	.063W	5%	47 Ω
R8070	ERJ2GEJ470X	SMD	.063W	5%	47 Ω
R8071	ERJ2GEJ470X	SMD	.063W	5%	47 Ω
R8072	ERJ2GEJ470X	SMD	.063W	5%	47 Ω
R8073	ERJ2GEJ470X	SMD	.063W	5%	47 Ω
R8074	ERJ2GEJ221X	SMD	.063W	5%	220 Ω
R8075	ERJ2GEJ470X	SMD	.063W	5%	47 Ω
R8076	ERJ2GEJ470X	SMD	.063W	5%	47 Ω
R8077	ERJ2GEJ470X	SMD	.063W	5%	47 Ω
R8078	ERJ2GEJ470X	SMD	.063W	5%	47 Ω
R8079	ERJ2GE0R00X	SMD	.063W	-	0 Ω
R8080	ERJ2GE0R00X	SMD	.063W	-	0 Ω
R8081	ERJ2GEJ103X	SMD	.063W	5%	10K Ω
R8082	D1BA75R0A026	SMD	.063W	1%	75 Ω
R8083	ERJ2GEJ301X	SMD	.063W	5%	300 Ω
R8084	ERJ2GE0R00X	SMD	.063W	-	0 Ω
R8086	ERJ2GEJ104X	SMD	.063W	5%	100K Ω
R8087	ERJ2GEJ103X	SMD	.063W	5%	10K Ω
R8090	ERJ2GEJ103X	SMD	.063W	5%	10K Ω
R8091	ERJ2GEJ101X	SMD	.063W	5%	100 Ω
R8093	ERJ2GEJ470X	SMD	.063W	5%	47 Ω
R8095	ERJ2GEJ103X	SMD	.063W	5%	10K Ω
R8097	ERJ2GEJ221X	SMD	.063W	5%	220 Ω
R8098	ERJ2GEJ103X	SMD	.063W	5%	10K Ω
R8099	ERJ2GEJ103X	SMD	.063W	5%	10K Ω
R8100	ERJ2GEJ470X	SMD	.063W	5%	47 Ω
R8101	ERJ2GEJ103X	SMD	.063W	5%	10K Ω
R8106	ERJ2GEJ202X	SMD	.063W	5%	2K Ω
R8107	ERJ2GEJ101X	SMD	.063W	5%	100 Ω
R8108	ERJ2GEJ223X	SMD	.063W	5%	22K Ω
R8111	ERJ2GEJ103X	SMD	.063W	5%	10K Ω
R8301	EXB2HV680JV	SMD	.063W	5%	68 Ω
R8303	ERJ2GEJ101X	SMD	.063W	5%	100 Ω
R8304	ERJ2GEJ101X	SMD	.063W	5%	100 Ω
R8305	ERJ2GEJ223X	SMD	.063W	5%	22K Ω
R8306	ERJ2GEJ472X	SMD	.063W	5%	4K7 Ω
R8307	ERJ2GEJ472X	SMD	.063W	5%	4K7 Ω
R8308	ERJ2GEJ103X	SMD	.063W	5%	10K Ω
R8309	ERJ2GEJ101X	SMD	.063W	5%	100 Ω
R8310	ERJ2GEJ101X	SMD	.063W	5%	100 Ω
R8311	ERJ2GEJ101X	SMD	.063W	5%	100 Ω
R8312	ERJ2GEJ101X	SMD	.063W	5%	100 Ω
R8314	ERJ2GEJ101X	SMD	.063W	5%	100 Ω
R8315	ERJ2GEJ101X	SMD	.063W	5%	100 Ω

Cct Ref	Parts Number	Description			
R8318	ERJ2GEJ472X	SMD	.063W	5%	4K7 Ω
R8321	ERJ2GEJ103X	SMD	.063W	5%	10K Ω
R8322	ERJ2GEJ102X	SMD	.063W	5%	1K Ω
R8323	ERJ2GEJ473X	SMD	.063W	5%	47K Ω
R8324	ERJ2GEJ473X	SMD	.063W	5%	47K Ω
R8325	ERJ2GEJ680X	SMD	.063W	5%	68 Ω
R8326	ERJ2GEJ680X	SMD	.063W	5%	68 Ω
R8327	ERJ2GEJ680X	SMD	.063W	5%	68 Ω
R8329	ERJ2GEJ473X	SMD	.063W	5%	47K Ω
R8401	ERJ8GEY0R00	S.M.CARB	.125W	-	0 Ω
R8402	ERJ6GEY0R00	S.M.CARB	0.1W	-	0 Ω
R8404	ERJ2GEJ103X	SMD	.063W	5%	10K Ω
R8405	ERJ2GEJ103X	SMD	.063W	5%	10K Ω
R8406	ERJ8RSJR10V	SMD	0.25W	5%	0.1 Ω
R8407	ERJ2GEJ473X	SMD	.063W	5%	47K Ω
R8410	ERJ2GEJ223X	SMD	.063W	5%	22K Ω
R8411	ERJ2GEJ223X	SMD	.063W	5%	22K Ω
R8412	EXB2HV473JV	CHIP RES	.063W	5%	47K Ω
R8414	EXB2HV101JV	SMD	.063W	5%	100 Ω
R8416	ERJ2GEJ223X	SMD	.063W	5%	22K Ω
R8417	ERJ2GEJ104X	SMD	.063W	5%	100K Ω
R8418	ERJ2GEJ681X	SMD	.063W	5%	680 Ω
R8419	EXB2HV101JV	SMD	.063W	5%	100 Ω
R8421	ERJ2GEJ680X	SMD	.063W	5%	68 Ω
R8422	ERJ2GEJ680X	SMD	.063W	5%	68 Ω
R8423	ERJ2GEJ680X	SMD	.063W	5%	68 Ω
R8424	ERJ2GEJ680X	SMD	.063W	5%	68 Ω
R8425	ERJ2GEJ680X	SMD	.063W	5%	68 Ω
R8426	ERJ2GE0R00X	SMD	.063W	-	0 Ω
R8427	EXB2HV680JV	SMD	.063W	5%	68 Ω
R8428	EXB2HV680JV	SMD	.063W	5%	68 Ω
R8430	ERJ2GEJ101X	SMD	.063W	5%	100 Ω
R8431	ERJ2GEJ151X	SMD	.063W	5%	150 Ω
R8432	ERJ2GEJ151X	SMD	.063W	5%	150 Ω
R8433	ERJ2GEJ223X	SMD	.063W	5%	22K Ω
R8434	ERJ2GEJ473X	SMD	.063W	5%	47K Ω
R8435	ERJ2GEJ103X	SMD	.063W	5%	10K Ω
R8436	ERJ2GEJ103X	SMD	.063W	5%	10K Ω
R8437	EXB2HV104JV	CHIP RES	.063W	5%	100K Ω
R8438	ERJ2GEJ104X	SMD	.063W	5%	100K Ω
R8440	ERJ2GEJ104X	SMD	.063W	5%	100K Ω
R8441	EXB2HV680JV	SMD	.063W	5%	68 Ω
R8443	EXB2HV680JV	SMD	.063W	5%	68 Ω
R8445	ERJ2GEJ104X	SMD	.063W	5%	100K Ω
R8446	ERJ2GEJ680X	SMD	.063W	5%	68 Ω
R8449	ERJ2GEJ680X	SMD	.063W	5%	68 Ω
R8450	ERJ2GEJ103X	SMD	.063W	5%	10K Ω
R8451	EXB28V680JX	SMD	.031W	5%	68 Ω
R8452	ERJ2GEJ680X	SMD	.063W	5%	68 Ω
R8453	ERJ2GEJ680X	SMD	.063W	5%	68 Ω
R8454	EXB28V151JX	SMD	.031W	5%	150 Ω
R8456	ERJ2GEJ680X	SMD	.063W	5%	68 Ω
R8457	ERJ2GEJ680X	SMD	.063W	5%	68 Ω
R8458	ERJ2GEJ680X	SMD	.063W	5%	68 Ω
R8459	ERJ2GEJ680X	SMD	.063W	5%	68 Ω
R8460	ERJ2GEJ680X	SMD	.063W	5%	68 Ω
R8461	ERJ2GEJ680X	SMD	.063W	5%	68 Ω
R8463	EXB28V151JX	SMD	.031W	5%	150 Ω
R8465	ERJ2GEJ103X	SMD	.063W	5%	10K Ω
R8466	ERJ2GEJ103X	SMD	.063W	5%	10K Ω
R8468	ERJ2GE0R00X	SMD	.063W	-	0 Ω
R8469	ERJ2GEJ101X	SMD	.063W	5%	100 Ω
R8470	ERJ2GEJ103X	SMD	.063W	5%	10K Ω
R8471	ERJ2GEJ103X	SMD	.063W	5%	10K Ω
R8477	ERJ2GE0R00X	SMD	.063W	-	0 Ω
R8484	ERJ2GE0R00X	SMD	.063W	-	0 Ω
R8502	ERJ2GEJ331X	SMD	.063W	5%	330 Ω
R8503	ERJ2GEJ331X	SMD	.063W	5%	330 Ω

Cct Ref	Parts Number	Description			
R8504	ERJ2GEJ331X	SMD	.063W	5%	330 Ω
R8506	ERJ2GEJ331X	SMD	.063W	5%	330 Ω
R8507	ERJ3EKF91R0V	SMD	0.1W	1%	91 Ω
R8508	ERJ3EKF91R0V	SMD	0.1W	1%	91 Ω
R8509	ERJ3EKF91R0V	SMD	0.1W	1%	91 Ω
R8510	ERJ3EKF91R0V	SMD	0.1W	1%	91 Ω
R8512	ERJ3EKF1800V	SMD	0.1W	1%	180 Ω
R8513	ERJ2GE0R00X	SMD	.063W	-	0 Ω
R8551	ERJ2GEJ103X	SMD	.063W	5%	10K Ω
R8556	ERJ2GEJ680X	SMD	.063W	5%	68 Ω
R8564	ERJ2GEJ103X	SMD	.063W	5%	10K Ω
R8601	ERJ2GEJ220X	SMD	.063W	5%	22 Ω
R8602	ERJ2GEJ220X	SMD	.063W	5%	22 Ω
R8603	ERJ2GEJ473X	SMD	.063W	5%	47K Ω
R8604	ERJ6GEY0R00	S.M.CARB	0.1W	-	0 Ω
R8605	ERJ2GEJ680X	SMD	.063W	5%	68 Ω
R8621	ERJ2GEJ680X	SMD	.063W	5%	68 Ω
R8622	ERJ2GEJ680X	SMD	.063W	5%	68 Ω
R8623	ERJ2GEJ680X	SMD	.063W	5%	68 Ω
R8624	ERJ2GEJ680X	SMD	.063W	5%	68 Ω
R8625	ERJ2GEJ680X	SMD	.063W	5%	68 Ω
R8626	ERJ2GEJ680X	SMD	.063W	5%	68 Ω
R8627	ERJ2GEJ680X	SMD	.063W	5%	68 Ω
R8628	ERJ2GEJ680X	SMD	.063W	5%	68 Ω
R8629	ERJ2GEJ680X	SMD	.063W	5%	68 Ω
R8630	ERJ2GEJ680X	SMD	.063W	5%	68 Ω
R8631	ERJ2GEJ680X	SMD	.063W	5%	68 Ω
R8632	ERJ2GEJ680X	SMD	.063W	5%	68 Ω
R8633	ERJ2GEJ680X	SMD	.063W	5%	68 Ω
R8634	ERJ2GEJ680X	SMD	.063W	5%	68 Ω
R8635	ERJ2GEJ680X	SMD	.063W	5%	68 Ω
R8636	ERJ2GEJ680X	SMD	.063W	5%	68 Ω
R8653	ERJ2GEJ103X	SMD	.063W	5%	10K Ω
R8655	ERJ2GEJ103X	SMD	.063W	5%	10K Ω
R8702	ERJ2GE0R00X	SMD	.063W	-	0 Ω
R8709	ERJ2GE0R00X	SMD	.063W	-	0 Ω
R8710	ERJ2GEJ680X	SMD	.063W	5%	68 Ω
R8711	ERJ2GEJ103X	SMD	.063W	5%	10K Ω
R8712	ERJ2GEJ103X	SMD	.063W	5%	10K Ω
R8732	ERJ2GEJ101X	SMD	.063W	5%	100 Ω
R8735	ERJ2GEJ680X	SMD	.063W	5%	68 Ω
R8736	ERJ2GEJ680X	SMD	.063W	5%	68 Ω
R8737	ERJ2GEJ680X	SMD	.063W	5%	68 Ω
R8738	ERJ2GEJ680X	SMD	.063W	5%	68 Ω
R8739	ERJ2GEJ680X	SMD	.063W	5%	68 Ω
R8742	ERJ2GEJ103X	SMD	.063W	5%	10K Ω
R8745	ERJ2GEJ103X	SMD	.063W	5%	10K Ω
R8746	ERJ2GEJ103X	SMD	.063W	5%	10K Ω
R8749	ERJ2GEJ103X	SMD	.063W	5%	10K Ω
R8802	ERJ2GEJ103X	SMD	.063W	5%	10K Ω
R8803	ERJ2GEJ103X	SMD	.063W	5%	10K Ω
R8804	ERJ2GEJ103X	SMD	.063W	5%	10K Ω
R8805	ERJ2GEJ103X	SMD	.063W	5%	10K Ω
R8806	ERJ2GEJ103X	SMD	.063W	5%	10K Ω
R8807	ERJ2GEJ103X	SMD	.063W	5%	10K Ω
R8808	ERJ2GEJ103X	SMD	.063W	5%	10K Ω
R8809	ERJ2GEJ103X	SMD	.063W	5%	10K Ω
R8812	ERJ2GE0R00X	SMD	.063W	-	0 Ω
R8813	EXB28V221JX	SMD	.031W	5%	220 Ω
R8814	ERJ2GEJ680X	SMD	.063W	5%	68 Ω
R8815	ERJ2GEJ680X	SMD	.063W	5%	68 Ω
R8816	ERJ2GEJ680X	SMD	.063W	5%	68 Ω
R8817	ERJ2GEJ680X	SMD	.063W	5%	68 Ω
R8825	ERJ6GEY0R00	S.M.CARB	0.1W	-	0 Ω
R8828	ERJ2GEJ103X	SMD	.063W	5%	10K Ω
R8832	ERJ2GEJ103X	SMD	.063W	5%	10K Ω
R8851	ERJ2GE0R00X	SMD	.063W	-	0 Ω
R8852	ERJ2GE0R00X	SMD	.063W	-	0 Ω

Cct Ref	Parts Number	Description			
R8853	ERJ2GE0R00X	SMD	.063W	-	0 Ω
R8854	ERJ2GE0R00X	SMD	.063W	-	0 Ω
R8855	ERJ2GEJ680X	SMD	.063W	5%	68 Ω
R8856	ERJ2GEJ680X	SMD	.063W	5%	68 Ω
R8857	ERJ2GEJ680X	SMD	.063W	5%	68 Ω
R8858	ERJ2GEJ680X	SMD	.063W	5%	68 Ω
R8859	ERJ2GEJ680X	SMD	.063W	5%	68 Ω
R8860	ERJ2GEJ680X	SMD	.063W	5%	68 Ω
R8862	ERJ2GEJ680X	SMD	.063W	5%	68 Ω
R8863	ERJ2GEJ680X	SMD	.063W	5%	68 Ω
R8864	ERJ2GEJ680X	SMD	.063W	5%	68 Ω
R8865	EXB2HV680JV	SMD	.063W	5%	68 Ω
R8866	EXB2HV680JV	SMD	.063W	5%	68 Ω
R8867	EXB2HV680JV	SMD	.063W	5%	68 Ω
R8868	ERJ2GEJ680X	SMD	.063W	5%	68 Ω
R8869	ERJ2GEJ103X	SMD	.063W	5%	10K Ω
R8870	ERJ2GE0R00X	SMD	.063W	-	0 Ω
R8871	ERJ2GEJ103X	SMD	.063W	5%	10K Ω
R8874	ERJ2GEJ103X	SMD	.063W	5%	10K Ω
R8875	ERJ2GEJ103X	SMD	.063W	5%	10K Ω
R8876	ERJ2GEJ103X	SMD	.063W	5%	10K Ω
R8877	ERJ2GEJ680X	SMD	.063W	5%	68 Ω
R8878	ERJ2GEJ680X	SMD	.063W	5%	68 Ω
R8879	ERJ2GEJ680X	SMD	.063W	5%	68 Ω
R8880	ERJ2GEJ680X	SMD	.063W	5%	68 Ω
R8881	ERJ2GEJ680X	SMD	.063W	5%	68 Ω
R8882	ERJ2GEJ680X	SMD	.063W	5%	68 Ω
R8883	ERJ2GEJ680X	SMD	.063W	5%	68 Ω
R8884	ERJ2GEJ680X	SMD	.063W	5%	68 Ω
R8885	ERJ2GEJ680X	SMD	.063W	5%	68 Ω
R8886	ERJ2GEJ680X	SMD	.063W	5%	68 Ω
R8887	ERJ2GEJ680X	SMD	.063W	5%	68 Ω
R8888	ERJ2GEJ680X	SMD	.063W	5%	68 Ω
R8889	ERJ2GEJ680X	SMD	.063W	5%	68 Ω
R8890	ERJ2GEJ680X	SMD	.063W	5%	68 Ω
R8891	ERJ2GEJ680X	SMD	.063W	5%	68 Ω
R8892	ERJ2GEJ680X	SMD	.063W	5%	68 Ω
R8893	ERJ2GE0R00X	SMD	.063W	-	0 Ω
R8894	ERJ2GEJ680X	SMD	.063W	5%	68 Ω
R8896	ERJ2GE0R00X	SMD	.063W	-	0 Ω
R8897	ERJ2GE0R00X	SMD	.063W	-	0 Ω
R8898	ERJ2GEJ103X	SMD	.063W	5%	10K Ω
R8899	ERJ2GEJ103X	SMD	.063W	5%	10K Ω
R8900	ERJ2GEJ680X	SMD	.063W	5%	68 Ω
R8901	ERJ2GEJ680X	SMD	.063W	5%	68 Ω
R8904	ERJ2GEJ103X	SMD	.063W	5%	10K Ω
R8905	ERJ2GEJ103X	SMD	.063W	5%	10K Ω
R8906	ERJ2GEJ103X	SMD	.063W	5%	10K Ω
R8907	ERJ2GEJ103X	SMD	.063W	5%	10K Ω
R8908	ERJ2GEJ103X	SMD	.063W	5%	10K Ω
R8909	ERJ2GEJ103X	SMD	.063W	5%	10K Ω
R8910	ERJ2GEJ103X	SMD	.063W	5%	10K Ω
R8911	ERJ2GEJ680X	SMD	.063W	5%	68 Ω
R8912	ERJ2GEJ680X	SMD	.063W	5%	68 Ω
R8913	ERJ2GEJ680X	SMD	.063W	5%	68 Ω
R8914	ERJ2GEJ680X	SMD	.063W	5%	68 Ω
R8915	ERJ2GEJ680X	SMD	.063W	5%	68 Ω
R8916	ERJ2GEJ680X	SMD	.063W	5%	68 Ω
R8917	ERJ2GEJ680X	SMD	.063W	5%	68 Ω
R8918	ERJ2GEJ680X	SMD	.063W	5%	68 Ω
R8919	ERJ2GEJ472X	SMD	.063W	5%	4K7 Ω
R8920	ERJ2GEJ472X	SMD	.063W	5%	4K7 Ω
R8921	ERJ2GEJ472X	SMD	.063W	5%	4K7 Ω
R8922	ERJ2GEJ472X	SMD	.063W	5%	4K7 Ω
R8923	ERJ2GEJ562X	SMD	.063W	5%	5K6 Ω
R8924	ERJ2GEJ562X	SMD	.063W	5%	5K6 Ω
R8925	ERJ2GEJ472X	SMD	.063W	5%	4K7 Ω
R8926	ERJ2GEJ472X	SMD	.063W	5%	4K7 Ω

Cct Ref	Parts Number	Description			
R8927	ERJ2GE0R00X	SMD	.063W	-	0 Ω
R8929	EXB2HVR000V	SMD	0W	-	0 Ω
R8935	ERJ2GEJ103X	SMD	.063W	5%	10K Ω
R8947	ERJ2GEJ680X	SMD	.063W	5%	68 Ω
R8948	ERJ2GEJ103X	SMD	.063W	5%	10K Ω
R8963	ERJ2GEJ103X	SMD	.063W	5%	10K Ω

CAPACITORS

Cct Ref	Parts Number	Description			
C801	ECKCNA102MB7	CERAMIC	250V	1nF	⚠
C802	ECKCNA102MB7	CERAMIC	250V	1nF	⚠
C803	ECQU2A224MLA	FILM	275V	220nF	⚠
C807	ECKWBE472ZER	CERAMIC	250V	4.7nF	
C808	ECKWBE472ZER	CERAMIC	250V	4.7nF	
C809	ECKWBE472ZER	CERAMIC	250V	4.7nF	
C810	ECKWBE472ZER	CERAMIC	250V	4.7nF	
C811	ECA1HHG010B	ELECT	50V	1μF	
C812	ECJ2VB1H182K	S.M.CAP	50V	1.8nF	
C813	ECA1HHGR22B	ELECT	50V	0.22μF	
C814	ECJ2VB1H223K	S.M.CAP	50V	22nF	
C815	ECQE6474JFB	FILM	630V	470nF	
C816	ECJ2VF1H104Z	S.M.CAP	50V	100nF	
C817	ECA1HHG100B	ELECT	50V	10μF	
C818	ECA1JHG101B	ELECT	63V	100μF	
C820	ECJ2VB1H103K	S.M.CAP	50V	10nF	
C821	ECKW3D151KBP	SMD	2KV	150pF	
C822	ECA1JHG101B	ELECT	63V	100μF	
C823	EETEE2W750HJ	ELECT	450V	75μF	
C824	ECJ3YB1E106M	S.M.CAP	25V	10μF	
C825	ECA1HHG101B	ELECT	50V	100μF	
C826	ECJ2VB1H223K	S.M.CAP	50V	22nF	
C827	ECJ2FB1E224K	S.M.CAP	25V	220nF	
C829	ECQV1H824JL3	FILM	50V	820nF	
C830	ECJ2VC1H271J	S.M.CAP	50V	270pF	
C831	ECJ2VF1H224Z	S.M.CAP	50V	220nF	
C832	ECJ2VF1C104Z	S.M.CAP	16V	100nF	
C834	ECWF6303HLB	FILM	630V	0.03μF	
C835	ECJ2VB1H331K	S.M.CAP	50V	330pF	
C836	ECKC3D271JB	CERAMIC	2KV	270pF	
C837	ECEA1CKN4R7B	ELECT	16V	4.7μF	
C838	ECJ2VF1C104Z	S.M.CAP	16V	100nF	
C839	ECJ2VB1H272K	S.M.CAP	50V	2.7nF	
C840	ECKCNA152ME7	CERAMIC	400V	1.5nF	⚠
C841	ECQU2A224MLA	FILM	275V	220nF	⚠
C845	ECQV1J105JM3	FILM	63V	1μF	
C846	ECJ1VB1C103K	S.M.CAP	16V	10nF	
C851	ECJ2FB1H104	S.M.CAP	50V	100nF	
C854	ECQV1H474JZ	FILM	50V	470nF	
C858	ECJ3YB1E106M	S.M.CAP	25V	10μF	
C859	EEUFM1V102B	ELECT	35V	1000μF	
C860	EEUFM1V102B	ELECT	35V	1000μF	
C861	ECJ2FB1C105K	S.M.CAP	16V	1000nF	
C862	EEUFM1V102B	ELECT	35V	1000μF	
C864	ECA1HM101GB	ELECT	50V	100μF	
C865	ECJ3YB1E106M	S.M.CAP	25V	10μF	
C866	ECJ2FB1H104	S.M.CAP	50V	100nF	
C870	ECJ2FB1H104	S.M.CAP	50V	100nF	
C872	ECJ2FB1H104	S.M.CAP	50V	100nF	
C873	ECJ2FB1H104	S.M.CAP	50V	100nF	
C874	ECJ2FB1H104	S.M.CAP	50V	100nF	
C875	ECJ2FB1H104	S.M.CAP	50V	100nF	
C876	ECJ2FB1H104	S.M.CAP	50V	100nF	
C877	ECJ2FB1H104	S.M.CAP	50V	100nF	
C878	ECJ2FB1H104	S.M.CAP	50V	100nF	
C879	ECJ2FB1H104	S.M.CAP	50V	100nF	
C881	ECJ2FB1H104	S.M.CAP	50V	100nF	
C1006	F2G0J470A019	ELECT	6.3V	47μF	
C1007	ECJ1VB1H103	S.M.CAP	50V	10nF	
C1008	ECJ1VF1C104Z	S.M.CAP	16V	100nF	

Cct Ref	Parts Number	Description		
C1010	F2G0J220A019	ELECT	6.3V	22μF
C1102	F1J1A106A043	CERAMIC	10V	10μF
C1103	F1G1C104A081	S.M.CAP	16V	100nF
C1104	F1G1C104A081	S.M.CAP	16V	100nF
C1106	F1H1H2700008	S.M.CAP	50V	27pF
C1107	F1G1H220A565	S.M.CAP	50V	22pF
C1108	F1G1C104A081	S.M.CAP	16V	100nF
C1109	ECJ1VB1C105K	SMD	16V	1000nF
C1111	ECJ1VB1C105K	SMD	16V	1000nF
C1112	F1G1C104A081	S.M.CAP	16V	100nF
C1114	F1G1C104A081	S.M.CAP	16V	100nF
C1117	F1G1C104A081	S.M.CAP	16V	100nF
C1122	F1G1E1030005	S.M.CAP	25V	10nF
C1123	ECJ1VB1C105K	SMD	16V	1000nF
C2005	F1H1H5610007	S.M.CAP	50V	560pF
C2006	F1H1H5610007	S.M.CAP	50V	560pF
C2007	F1H1H5610007	S.M.CAP	50V	560pF
C2008	F1H1H5610007	S.M.CAP	50V	560pF
C2010	F1H1H5610007	S.M.CAP	50V	560pF
C2011	F1H1H5610007	S.M.CAP	50V	560pF
C2012	F1H1H5610007	S.M.CAP	50V	560pF
C2013	F1H1H5610007	S.M.CAP	50V	560pF
C2014	F1H1H5610007	S.M.CAP	50V	560pF
C2015	F1H1H5610007	S.M.CAP	50V	560pF
C2021	F1H1H5610007	S.M.CAP	50V	560pF
C2022	F1H1H5610007	S.M.CAP	50V	560pF
C2023	F1G1C104A081	S.M.CAP	16V	100nF
C2048	F1G1C104A081	S.M.CAP	16V	100nF
C2049	F1G1C104A081	S.M.CAP	16V	100nF
C2050	F1G1C104A081	S.M.CAP	16V	100nF
C2052	F1G1C104A081	S.M.CAP	16V	100nF
C2053	F1G1C104A081	S.M.CAP	16V	100nF
C2054	F1J1A106A043	CERAMIC	10V	10μF
C2055	F1H1H1200004	S.M.CAP	50V	12pF
C2056	ECJ1VC1H080	S.M.CAP	50V	8pF
C2057	F1G1C104A081	S.M.CAP	16V	100nF
C2058	F1G1C104A081	S.M.CAP	16V	100nF
C2059	EEEHB0J470UR	SMD	6.3V	47μF
C2060	EEEHB1C470P	ELECT	16V	47μF
C2061	F1G1C104A081	S.M.CAP	16V	100nF
C2062	F1J1A106A043	CERAMIC	10V	10μF
C2063	F1J0J106A021	S.M.CAP	6.3V	10μF
C2064	F1J0J106A021	S.M.CAP	6.3V	10μF
C2065	F1G1C104A081	S.M.CAP	16V	100nF
C2068	ECJ1VB1H122K	S.M.CAP	50V	1.2nF
C2069	ECJ1VB1H122K	S.M.CAP	50V	1.2nF
C2088	ECJ2FB1C475K	SMD	16V	4700nF
C2089	F1H1H5610007	S.M.CAP	50V	560pF
C2091	ECJ1VC1H100D	S.M.CAP	50V	10pF
C2092	F1G1H220A565	S.M.CAP	50V	22pF
C2096	F1G1C104A081	S.M.CAP	16V	100nF
C2097	F1G1C104A081	S.M.CAP	16V	100nF
C2098	EEEHB0J221UP	ELECT	6.3V	220μF
C2099	EEEHB0J221UP	ELECT	6.3V	220μF
C2100	F1G1C104A081	S.M.CAP	16V	100nF
C2101	F1J1A106A043	CERAMIC	10V	10μF
C2102	F1G1C104A081	S.M.CAP	16V	100nF
C2103	F1J1A106A043	CERAMIC	10V	10μF
C2104	F1J1A106A043	CERAMIC	10V	10μF
C2105	F1G1C104A081	S.M.CAP	16V	100nF
C2106	F1G1C104A081	S.M.CAP	16V	100nF
C2107	EEEHB0J470UR	SMD	6.3V	47μF
C2108	EEEHB0J470UR	SMD	6.3V	47μF
C2109	F1G1C104A081	S.M.CAP	16V	100nF
C2110	F1G1C104A081	S.M.CAP	16V	100nF
C2111	F1H0J2250008	CERAMIC	6.3V	2200nF
C2112	EEEHB0J470UR	SMD	6.3V	47μF
C2113	EEEHB0J470UR	SMD	6.3V	47μF

Cct Ref	Parts Number	Description		
C2114	F1G1C104A081	S.M.CAP	16V	100nF
C2115	F1G1C104A081	S.M.CAP	16V	100nF
C2116	F1H1H471A792	S.M.CAP	50V	470pF
C2117	F1G1C104A081	S.M.CAP	16V	100nF
C2118	ECJ1VB1C105K	SMD	16V	1000nF
C2119	EEEHB1C221UP	ELECT	16V	220µF
C2120	F1H1H5600007	S.M.CAP	50V	56pF
C2121	F1H1H5600007	S.M.CAP	50V	56pF
C2122	F1J1A106A043	CERAMIC	10V	10µF
C2123	F1J1A106A043	CERAMIC	10V	10µF
C2124	F1G1C104A081	S.M.CAP	16V	100nF
C2126	F1J1A106A043	CERAMIC	10V	10µF
C2127	ECJ1VB1C105K	SMD	16V	1000nF
C2129	ECJ1VB1C105K	SMD	16V	1000nF
C2130	F1J1A106A043	CERAMIC	10V	10µF
C2131	F1G1C104A081	S.M.CAP	16V	100nF
C2132	F1G1E1030005	S.M.CAP	25V	10nF
C2133	F2G1H4R7A031	ELECT	50V	4.7µF
C2134	F1G1E1030005	S.M.CAP	25V	10nF
C2135	ECJ1VB1C105K	SMD	16V	1000nF
C2136	ECJ1VB1C105K	SMD	16V	1000nF
C2137	EEEHB0J470UR	SMD	6.3V	47µF
C2138	F1G1C104A081	S.M.CAP	16V	100nF
C2139	F1J1A106A043	CERAMIC	10V	10µF
C2140	F1J1A106A043	CERAMIC	10V	10µF
C2141	F1J1A106A043	CERAMIC	10V	10µF
C2142	F1J1A106A043	CERAMIC	10V	10µF
C2143	F1H1H181A792	S.M.CAP	50V	180pF
C2146	F1H1H181A792	S.M.CAP	50V	180pF
C2147	EEEHB1C220UR	SMD	16V	22µF
C2151	EEEHB0J470UR	SMD	6.3V	47µF
C2153	F1H1H3300005	S.M.CAP	50V	33pF
C2154	F1G1C104A081	S.M.CAP	16V	100nF
C2155	ECJ1VB1C105K	SMD	16V	1000nF
C2157	ECJ1VB1C105K	SMD	16V	1000nF
C2159	ECJ1VB1C105K	SMD	16V	1000nF
C2160	ECJ1VB1C105K	SMD	16V	1000nF
C2161	EEEHB1C101UP	ELECT	16V	100µF
C2162	ECJ1VB1C105K	SMD	16V	1000nF
C2163	ECJ1VB1C105K	SMD	16V	1000nF
C2164	ECJ1VB1C105K	SMD	16V	1000nF
C2165	ECJ1VB1C105K	SMD	16V	1000nF
C2166	ECJ1VC1H821J	SMD	50V	820pF
C2167	ECJ1VC1H821J	SMD	50V	820pF
C2170	F1H1H3300005	S.M.CAP	50V	33pF
C2171	F1G1E1030005	S.M.CAP	25V	10nF
C2173	ECJ2FB1C475K	SMD	16V	4700nF
C2174	F1H1A1050028	CERAMIC	10V	1µF
C2175	F2G1C470A022	ELECT	16V	47µF
C2176	F1H1H103A219	CERAMIC	50V	10nF
C2179	F2G1C470A022	ELECT	16V	47µF
C2180	F1H1A1050028	CERAMIC	10V	1µF
C2183	F1J1A106A043	CERAMIC	10V	10µF
C2184	F1H1H102A219	CERAMIC	50V	1nF
C2185	F1J1A106A043	CERAMIC	10V	10µF
C2186	F1G1C104A081	S.M.CAP	16V	100nF
C2187	F1H0J2250008	CERAMIC	6.3V	2200nF
C2188	F1H1H471A792	S.M.CAP	50V	470pF
C2189	ECJ1VB1C105K	SMD	16V	1000nF
C2190	F1J1A106A043	CERAMIC	10V	10µF
C2191	F1J1A106A043	CERAMIC	10V	10µF
C2192	EEEHB0J470UR	SMD	6.3V	47µF
C2195	F1H1H102A219	CERAMIC	50V	1nF
C2197	F1H1E333A029	S.M.CAP	25V	33nF
C2198	F1H1E333A029	S.M.CAP	25V	33nF
C2202	F1H1A1050028	CERAMIC	10V	1µF
C2203	F1H1A1050028	CERAMIC	10V	1µF
C2204	ECJ1VB1C105K	SMD	16V	1000nF

Cct Ref	Parts Number	Description		
C2213	F1G1H1020008	S.M.CAP	50V	1nF
C2216	F1G1C104A081	S.M.CAP	16V	100nF
C2244	F1G1C104A081	S.M.CAP	16V	100nF
C2245	F1G1H1020008	S.M.CAP	50V	1nF
C2246	F1J1A106A043	CERAMIC	10V	10µF
C2251	F1J1A106A043	CERAMIC	10V	10µF
C2261	F1J1A106A043	CERAMIC	10V	10µF
C2262	F1J1A106A043	CERAMIC	10V	10µF
C2263	F1J1A106A043	CERAMIC	10V	10µF
C2264	F1J1A106A043	CERAMIC	10V	10µF
C2265	F1G1H101A565	S.M.CAP	50V	100pF
C2266	F1G1H101A565	S.M.CAP	50V	100pF
C2267	F1G1H101A565	S.M.CAP	50V	100pF
C2268	F1G1H101A565	S.M.CAP	50V	100pF
C2270	F1H1H471A792	S.M.CAP	50V	470pF
C2271	F1H1H471A792	S.M.CAP	50V	470pF
C2272	ECJ2FB1C475K	SMD	16V	4700nF
C2274	F1G1C104A081	S.M.CAP	16V	100nF
C2280	ECJ2FB1C475K	SMD	16V	4700nF
C2281	F1H1H5610007	S.M.CAP	50V	560pF
C2299	F2G1C470A022	ELECT	16V	47µF
C2301	F1G1C104A081	S.M.CAP	16V	100nF
C2302	F1G1C104A081	S.M.CAP	16V	100nF
C2303	F1J1E105A171	S.M.CAP	25V	1µF
C2305	F1J1E105A171	S.M.CAP	25V	1µF
C2307	F1J1E105A171	S.M.CAP	25V	1µF
C2309	F1J1E105A171	S.M.CAP	25V	1µF
C2311	F1G1C104A081	S.M.CAP	16V	100nF
C2313	ECJ1VB1H104	S.M.CAP	50V	100nF
C2315	F1G1C104A081	S.M.CAP	16V	100nF
C2317	F1H1E333A029	S.M.CAP	25V	33nF
C2319	F1H1E333A029	S.M.CAP	25V	33nF
C2321	F1H1E333A029	S.M.CAP	25V	33nF
C2323	F1H1E333A029	S.M.CAP	25V	33nF
C2325	F1J1H474A757	S.M.CAP	50V	470nF
C2327	F1G1C104A081	S.M.CAP	16V	100nF
C2329	F1G1C104A081	S.M.CAP	16V	100nF
C2331	F1J1H474A757	S.M.CAP	50V	470nF
C2333	ECJ1VB1H104	S.M.CAP	50V	100nF
C2335	ECJ1VB1H104	S.M.CAP	50V	100nF
C2337	F1H1H223A219	S.M.CAP	50V	22nF
C2339	F1H1H223A219	S.M.CAP	50V	22nF
C2341	ECJ1VB1H104	S.M.CAP	50V	100nF
C2343	ECJ1VB1H104	S.M.CAP	50V	100nF
C2345	F1H1H223A219	S.M.CAP	50V	22nF
C2347	F1H1H223A219	S.M.CAP	50V	22nF
C2349	ECJ1VB1H104	S.M.CAP	50V	100nF
C2352	ECJ1VB1C105K	SMD	16V	1000nF
C2353	ECJ1VB1H104	S.M.CAP	50V	100nF
C2354	EEEHB1C221UP	ELECT	16V	220µF
C2355	ECJ1VB1H104	S.M.CAP	50V	100nF
C2357	ECJ1VB1H104	S.M.CAP	50V	100nF
C2359	ECJ1VB1H104	S.M.CAP	50V	100nF
C2361	EEEFG1E471P	ELECT	25V	470µF
C2363	F1G1C104A081	S.M.CAP	16V	100nF
C2375	F1H1H223A219	S.M.CAP	50V	22nF
C2377	F1H1H223A219	S.M.CAP	50V	22nF
C2379	F1H1H223A219	S.M.CAP	50V	22nF
C2381	F1H1H223A219	S.M.CAP	50V	22nF
C2383	F1G1H1020008	S.M.CAP	50V	1nF
C2385	F1G1H1020008	S.M.CAP	50V	1nF
C2387	F1G1H1020008	S.M.CAP	50V	1nF
C2389	F1G1H1020008	S.M.CAP	50V	1nF
C2801	ECJ3YB1C106M	S.M.CAP	16V	10µF
C2802	F1J1H474A757	S.M.CAP	50V	470nF
C2803	F1J1H474A757	S.M.CAP	50V	470nF
C2813	F1G1C104A081	S.M.CAP	16V	100nF
C2814	F1H1H472A219	SMD	50V	4.7nF

Cct Ref	Parts Number	Description		
C2815	F1G1C104A081	S.M.CAP	16V	100nF
C2816	EEEHB1V220P	SMD	35V	22μF
C2817	F1G1H1020008	S.M.CAP	50V	1nF
C2819	EEEHB1E470P	ELECT	25V	47μF
C3001	F1G1H1020008	S.M.CAP	50V	1nF
C3002	F1G1H1020008	S.M.CAP	50V	1nF
C3021	ECJ1VB1C105K	SMD	16V	1000nF
C3024	ECJ1VB1C105K	SMD	16V	1000nF
C3025	ECJ1VB1C105K	SMD	16V	1000nF
C3026	F1G1C104A081	S.M.CAP	16V	100nF
C3027	ECJ1VB1C105K	SMD	16V	1000nF
C3028	ECJ1VB1C105K	SMD	16V	1000nF
C3029	ECJ1VB1C105K	SMD	16V	1000nF
C3030	F1G1C104A081	S.M.CAP	16V	100nF
C3031	F1G1C104A081	S.M.CAP	16V	100nF
C3040	F1G1C104A081	S.M.CAP	16V	100nF
C3043	ECJ1VB1C105K	SMD	16V	1000nF
C3047	F1H1A225A051	S.M.CAP	10V	2200nF
C3049	F1H1A225A051	S.M.CAP	10V	2200nF
C3050	F1H1A225A051	S.M.CAP	10V	2200nF
C3051	ECJ1VB1C105K	SMD	16V	1000nF
C3052	ECJ1VB1C105K	SMD	16V	1000nF
C3053	ECJ1VB1C105K	SMD	16V	1000nF
C3054	ECJ1VB1C105K	SMD	16V	1000nF
C3055	ECJ1VB1C105K	SMD	16V	1000nF
C3056	ECJ1VB1C105K	SMD	16V	1000nF
C3066	ECJ1VB1C105K	SMD	16V	1000nF
C3068	F1G1C104A081	S.M.CAP	16V	100nF
C3070	EEEHB1C471UP	ELECT	16V	470μF
C3071	F1G1C104A081	S.M.CAP	16V	100nF
C3072	EEEHB1C471UP	ELECT	16V	470μF
C3075	EEEHB1C221UP	ELECT	16V	220μF
C3076	EEEHB1C221UP	ELECT	16V	220μF
C3081	EEFUD0J101ER	SMD	6.3V	100μF
C3100	ECJ1VB1C105K	SMD	16V	1000nF
C3101	ECJ1VB1C105K	SMD	16V	1000nF
C3102	ECJ1VB1C105K	SMD	16V	1000nF
C3103	EEEHB1H100P	SMD	50V	10μF
C3115	F1G1C104A081	S.M.CAP	16V	100nF
C3116	F1G1C104A081	S.M.CAP	16V	100nF
C3117	ECJ1VB1C105K	SMD	16V	1000nF
C3118	EEEHB1C470P	ELECT	16V	47μF
C3120	F1G1C104A081	S.M.CAP	16V	100nF
C3265	ECJ1VB1H104	S.M.CAP	50V	100nF
C3270	EEEHB0J102UP	ELECT	6.3V	1000μF
C3272	ECJ1VB1H104	S.M.CAP	50V	100nF
C3273	EEEHB1H100P	SMD	50V	10μF
C3275	F1G1C104A081	S.M.CAP	16V	100nF
C3276	F1G1C104A081	S.M.CAP	16V	100nF
C3279	F1G1E1030005	S.M.CAP	25V	10nF
C3280	F1G1H101A565	S.M.CAP	50V	100pF
C3281	F1G1C104A081	S.M.CAP	16V	100nF
C3700	ECJ2VC1H561J	S.M.CAP	50V	560pF
C3702	ECJ2VC1H561J	S.M.CAP	50V	560pF
C3705	ECJ1VF1H104Z	S.M.CAP	50V	100nF
C3707	ECJ1VF1H104Z	S.M.CAP	50V	100nF
C3853	F1L1V1060003	SMD	35V	10μF
C3854	F1L1V1060003	SMD	35V	10μF
C3855	F2A1V4710040	ELECT	35V	470μF
C3856	F2A1V4710040	ELECT	35V	470μF
C3858	ECJ2FB1A225K	S.M.CAP	10V	2200nF
C3860	ECJ1VB1H222K	S.M.CAP	50V	2.2nF
C3861	F2D1D1010006	ELECT	20V	100μF
C3862	ECJ2FB1A105K	S.M.CAP	10V	1000nF
C3863	ECJ1VB1H222K	S.M.CAP	50V	2.2nF
C3864	F2D1C1510005	ELECT	16V	150μF
C3865	ECJ3YB1E105K	SMD	25V	1000nF
C3866	ECJ3YB1E105K	SMD	25V	1000nF

Cct Ref	Parts Number	Description		
C3867	ECJ3YB1E105K	SMD	25V	1000nF
C3868	ECJ3YB1E105K	SMD	25V	1000nF
C3869	ECJ3YB1E105K	SMD	25V	1000nF
C3870	ECJ3YB1E105K	SMD	25V	1000nF
C3871	F1L1V1060003	SMD	35V	10μF
C3872	ECJ2FB1H104	S.M.CAP	50V	100nF
C3873	F2A1V4710040	ELECT	35V	470μF
C3876	ECA1HHG100B	ELECT	50V	10μF
C3877	ECJ2FB1A225K	S.M.CAP	10V	2200nF
C3878	ECJ1VB1H222K	S.M.CAP	50V	2.2nF
C3879	F2D0J3310008	ELECT	6.3V	330μF
C3880	F1L1V1060003	SMD	35V	10μF
C3881	ECJ3YB1E105K	SMD	25V	1000nF
C3882	ECJ3YB1E105K	SMD	25V	1000nF
C3883	F2A1V4710040	ELECT	35V	470μF
C3884	ECJ3YB1E105K	SMD	25V	1000nF
C3885	ECA1HHG100B	ELECT	50V	10μF
C3887	ECJ2FB1H104	S.M.CAP	50V	100nF
C3888	ECJ2FB1A225K	S.M.CAP	10V	2200nF
C3889	ECJ1VB1H222K	S.M.CAP	50V	2.2nF
C3890	F2D1C1510005	ELECT	16V	150μF
C3891	ECA1CHG470B	ELECT	16V	47μF
C3892	ECJ3YB1E105K	SMD	25V	1000nF
C3893	ECJ3YB1E105K	SMD	25V	1000nF
C3894	ECJ3YB1E105K	SMD	25V	1000nF
C3895	ECJ2VB1H103K	S.M.CAP	50V	10nF
C3897	ECJ2FB1C474K	S.M.CAP	16V	470nF
C3898	ECJ2VB1H103K	S.M.CAP	50V	10nF
C4203	F1G1C104A081	S.M.CAP	16V	100nF
C4500	F1G1C104A081	S.M.CAP	16V	100nF
C4501	F1G1C104A081	S.M.CAP	16V	100nF
C4502	F1G1C104A081	S.M.CAP	16V	100nF
C4503	F1G1C104A081	S.M.CAP	16V	100nF
C4506	F1G1C104A081	S.M.CAP	16V	100nF
C4507	F1G1C104A081	S.M.CAP	16V	100nF
C4508	EEEHB0J330R	ELECT	6.3V	33μF
C4509	EEEHB0J330R	ELECT	6.3V	33μF
C4510	F1G1C104A081	S.M.CAP	16V	100nF
C4511	F1G1C104A081	S.M.CAP	16V	100nF
C4515	F1G1C104A081	S.M.CAP	16V	100nF
C4527	ECJ1VB1C105K	SMD	16V	1000nF
C4528	F1G1C104A081	S.M.CAP	16V	100nF
C4531	F1G1C104A081	S.M.CAP	16V	100nF
C4533	F1G1H680A565	S.M.CAP	50V	68pF
C4534	F1G1C104A081	S.M.CAP	16V	100nF
C4535	F1G1C104A081	S.M.CAP	16V	100nF
C4537	F1G1C104A081	S.M.CAP	16V	100nF
C4538	EEEHB0J470UR	SMD	6.3V	47μF
C4539	F1J1A106A043	CERAMIC	10V	10μF
C4541	F1H1H471A792	S.M.CAP	50V	470pF
C4543	F1G1C104A081	S.M.CAP	16V	100nF
C4544	F1G1C104A081	S.M.CAP	16V	100nF
C4545	F1G1C104A081	S.M.CAP	16V	100nF
C4546	F1H0J2250008	CERAMIC	6.3V	2200nF
C4547	F1G1C104A081	S.M.CAP	16V	100nF
C4548	F1G1C104A081	S.M.CAP	16V	100nF
C4549	F1G1C104A081	S.M.CAP	16V	100nF
C4550	F1G1C104A081	S.M.CAP	16V	100nF
C4551	F1G1C104A081	S.M.CAP	16V	100nF
C4552	F1G1C104A081	S.M.CAP	16V	100nF
C4553	F1G1H1020008	S.M.CAP	50V	1nF
C4555	F1J1A106A043	CERAMIC	10V	10μF
C4556	F1J1A106A043	CERAMIC	10V	10μF
C4557	F1G1C104A081	S.M.CAP	16V	100nF
C4559	F1G1C104A081	S.M.CAP	16V	100nF
C4560	F1G1C104A081	S.M.CAP	16V	100nF
C4562	F1H1H822A219	S.M.CAP	50V	8.2nF
C4563	ECJ1VB1C823K	S.M.CAP	16V	82nF

Cct Ref	Parts Number	Description		
C4564	F1G1E1030005	S.M.CAP	25V	10nF
C4565	F1G1E1030005	S.M.CAP	25V	10nF
C4566	ECJ1VB1C393K	S.M.CAP	16V	39nF
C4567	F1G1C104A081	S.M.CAP	16V	100nF
C4568	F1G1C104A081	S.M.CAP	16V	100nF
C4569	F1J1C684A097	S.M.CAP	16V	680nF
C4570	EEEHB0J470UR	SMD	6.3V	47μF
C4572	F1G1C104A081	S.M.CAP	16V	100nF
C4573	F1G1C104A081	S.M.CAP	16V	100nF
C4574	F1G1E1030005	S.M.CAP	25V	10nF
C4575	ECJ1VB1C105K	SMD	16V	1000nF
C4576	EEEHB0J470UR	SMD	6.3V	47μF
C4577	F1G1C104A081	S.M.CAP	16V	100nF
C4578	F1G1C104A081	S.M.CAP	16V	100nF
C4580	F1G1E1030005	S.M.CAP	25V	10nF
C4581	ECJ1VB1C105K	SMD	16V	1000nF
C4582	F1G1C104A081	S.M.CAP	16V	100nF
C4583	F1G1C104A081	S.M.CAP	16V	100nF
C4584	ECJ1VB1C105K	SMD	16V	1000nF
C4585	ECJ1VB1C105K	SMD	16V	1000nF
C4586	F1G1E1030005	S.M.CAP	25V	10nF
C4587	F1G1C104A081	S.M.CAP	16V	100nF
C4588	ECJ1VB1C823K	S.M.CAP	16V	82nF
C4589	F1G1H150A565	S.M.CAP	50V	15pF
C4590	ECJ0EC1H180J	S.M.CAP	50V	18pF
C4591	ECJ1VB1C105K	SMD	16V	1000nF
C4592	ECJ1VB1C105K	SMD	16V	1000nF
C4593	F1G1E1030005	S.M.CAP	25V	10nF
C4595	F1G1E1030005	S.M.CAP	25V	10nF
C4596	F1G1C104A081	S.M.CAP	16V	100nF
C4598	ECJ1VB1C105K	SMD	16V	1000nF
C4600	F1G1E1030005	S.M.CAP	25V	10nF
C4601	F1G1E1030005	S.M.CAP	25V	10nF
C4602	F1G1C104A081	S.M.CAP	16V	100nF
C4604	F1H0J2250008	CERAMIC	6.3V	2200nF
C4605	F1G1C104A081	S.M.CAP	16V	100nF
C4607	EEEHB0J470UR	SMD	6.3V	47μF
C4609	ECJ1VB1C105K	SMD	16V	1000nF
C4611	ECJ1VB1C105K	SMD	16V	1000nF
C4612	F1G1E1030005	S.M.CAP	25V	10nF
C4613	ECJ1VB1C105K	SMD	16V	1000nF
C4614	F1G1C104A081	S.M.CAP	16V	100nF
C4615	F1G1E1030005	S.M.CAP	25V	10nF
C4616	F1G1C104A081	S.M.CAP	16V	100nF
C4617	F1G1C104A081	S.M.CAP	16V	100nF
C4618	F1G1E1030005	S.M.CAP	25V	10nF
C4619	F1G1C104A081	S.M.CAP	16V	100nF
C4620	ECJ1VB1C105K	SMD	16V	1000nF
C4623	F1G1C104A081	S.M.CAP	16V	100nF
C4624	F1G1C104A081	S.M.CAP	16V	100nF
C4625	F1G1C104A081	S.M.CAP	16V	100nF
C4628	F1G1C104A081	S.M.CAP	16V	100nF
C4629	F1J1A106A043	CERAMIC	10V	10μF
C4800	F2G1C470A022	ELECT	16V	47μF
C4801	F1G1C104A081	S.M.CAP	16V	100nF
C4802	F2G0J220A019	ELECT	6.3V	22μF
C4803	F1G1E103A059	S.M.CAP	25V	10nF
C4804	F2G1C470A022	ELECT	16V	47μF
C4805	F1G1C104A081	S.M.CAP	16V	100nF
C4806	F1G1E103A059	S.M.CAP	25V	10nF
C4807	F1G1C104A081	S.M.CAP	16V	100nF
C5521	F1G1C104A081	S.M.CAP	16V	100nF
C5522	F1G1C104A081	S.M.CAP	16V	100nF
C5595	EEEHB1C220UR	SMD	16V	22μF
C5600	ECJ1VB1C105K	SMD	16V	1000nF
C5601	F1G1C104A081	S.M.CAP	16V	100nF
C5602	ECGRL0G680ER	ELECT	4V	68μF
C5603	F1G1E1030005	S.M.CAP	25V	10nF

Cct Ref	Parts Number	Description		
C5604	F1G1E1030005	S.M.CAP	25V	10nF
C5605	ECJ2FB1C475K	SMD	16V	4700nF
C5606	F1H1H471A792	S.M.CAP	50V	470pF
C5607	F1H1H221A792	SMD	50V	220pF
C5608	F1G1C104A081	S.M.CAP	16V	100nF
C5609	EEEHB1C470P	ELECT	16V	47μF
C5610	EEEHB1C470P	ELECT	16V	47μF
C5615	F1J1A106A043	CERAMIC	10V	10μF
C5616	ECJ0EB1A473K	S.M.CAP	10V	47nF
C5617	ECJ1VB1C105K	SMD	16V	1000nF
C5618	F1J1A106A043	CERAMIC	10V	10μF
C5619	F1J1A106A043	CERAMIC	10V	10μF
C5620	F1G1C104A081	S.M.CAP	16V	100nF
C5621	F1G1E1030005	S.M.CAP	25V	10nF
C5622	ECJ2FB1C475K	SMD	16V	4700nF
C5623	F1H1H471A792	S.M.CAP	50V	470pF
C5624	F1H1H221A792	SMD	50V	220pF
C5625	F1G1E1030005	S.M.CAP	25V	10nF
C5626	F1G1C104A081	S.M.CAP	16V	100nF
C5627	F1G1C104A081	S.M.CAP	16V	100nF
C5628	ECGRL0G680ER	ELECT	4V	68μF
C5629	ECGRL0G680ER	ELECT	4V	68μF
C5630	EEEHB1C470P	ELECT	16V	47μF
C5631	EEEHB1C470P	ELECT	16V	47μF
C5632	ECJ1VB1C105K	SMD	16V	1000nF
C5636	F1G1C104A081	S.M.CAP	16V	100nF
C5637	F1G1C104A081	S.M.CAP	16V	100nF
C5638	F1G1C104A081	S.M.CAP	16V	100nF
C5639	F1G1C104A081	S.M.CAP	16V	100nF
C5640	F1G1C104A081	S.M.CAP	16V	100nF
C5641	F1G1C104A081	S.M.CAP	16V	100nF
C5643	F1G1C104A081	S.M.CAP	16V	100nF
C5644	F1G1E1030005	S.M.CAP	25V	10nF
C5645	F1H0J2250008	CERAMIC	6.3V	2200nF
C5661	F1G1E1030005	S.M.CAP	25V	10nF
C5662	ECJ0EB1A473K	S.M.CAP	10V	47nF
C5663	F1G1E1030005	S.M.CAP	25V	10nF
C5670	ECJ1VB1C105K	SMD	16V	1000nF
C5673	ECJ1VB1C105K	SMD	16V	1000nF
C5674	ECJ1VB1C105K	SMD	16V	1000nF
C5676	F1G1C104A081	S.M.CAP	16V	100nF
C5690	EEEHB1C470P	ELECT	16V	47μF
C5691	EEEHB0J470UR	SMD	6.3V	47μF
C5692	F1G1C104A081	S.M.CAP	16V	100nF
C5693	F1G1C104A081	S.M.CAP	16V	100nF
C5694	EEEHB1C470P	ELECT	16V	47μF
C5695	EEEHB0J470UR	SMD	6.3V	47μF
C5710	F1J1H104A578	S.M.CAP	50V	100nF
C5730	F1G1E1030005	S.M.CAP	25V	10nF
C8001	F1G1C104A081	S.M.CAP	16V	100nF
C8002	ECJ1VB1C105K	SMD	16V	1000nF
C8003	ECJ1VB1C105K	SMD	16V	1000nF
C8004	ECJ1VB1C105K	SMD	16V	1000nF
C8005	ECJ1VB1C105K	SMD	16V	1000nF
C8006	F1G1C104A081	S.M.CAP	16V	100nF
C8007	F1G1C104A081	S.M.CAP	16V	100nF
C8008	F1G1C104A081	S.M.CAP	16V	100nF
C8009	F1J1A106A043	CERAMIC	10V	10μF
C8010	F1J1A106A043	CERAMIC	10V	10μF
C8011	F1G1C104A081	S.M.CAP	16V	100nF
C8012	F1G1C104A081	S.M.CAP	16V	100nF
C8013	F1G1C104A081	S.M.CAP	16V	100nF
C8014	F1G1C104A081	S.M.CAP	16V	100nF
C8015	ECJ1VB1C105K	SMD	16V	1000nF
C8016	ECJ1VB1C105K	SMD	16V	1000nF
C8017	F1J1A106A043	CERAMIC	10V	10μF
C8018	F1G1C104A081	S.M.CAP	16V	100nF
C8019	F1G1C104A081	S.M.CAP	16V	100nF

Cct Ref	Parts Number	Description		
C8020	F1G1C104A081	S.M.CAP	16V	100nF
C8021	F1G1C104A081	S.M.CAP	16V	100nF
C8022	ECJ1VB1C105K	SMD	16V	1000nF
C8023	F1J1A106A043	CERAMIC	10V	10µF
C8024	F1J1A106A043	CERAMIC	10V	10µF
C8025	F1G1C104A081	S.M.CAP	16V	100nF
C8026	F1G1C104A081	S.M.CAP	16V	100nF
C8027	F1G1C104A081	S.M.CAP	16V	100nF
C8028	F1G1C104A081	S.M.CAP	16V	100nF
C8029	F1G1C104A081	S.M.CAP	16V	100nF
C8030	ECJ1VB1C105K	SMD	16V	1000nF
C8031	ECJ1VB1C105K	SMD	16V	1000nF
C8032	F1J1A106A043	CERAMIC	10V	10µF
C8033	F1G1C104A081	S.M.CAP	16V	100nF
C8034	F1G1C104A081	S.M.CAP	16V	100nF
C8035	F1J1A106A043	CERAMIC	10V	10µF
C8036	F1J1A106A043	CERAMIC	10V	10µF
C8037	F1G1C104A081	S.M.CAP	16V	100nF
C8038	F1G1C104A081	S.M.CAP	16V	100nF
C8039	F1G1C104A081	S.M.CAP	16V	100nF
C8040	F1G1C104A081	S.M.CAP	16V	100nF
C8041	F1G1C104A081	S.M.CAP	16V	100nF
C8042	ECGRL0G680ER	ELECT	4V	68µF
C8043	F1G1C104A081	S.M.CAP	16V	100nF
C8044	F1G1C104A081	S.M.CAP	16V	100nF
C8045	F1G1C104A081	S.M.CAP	16V	100nF
C8046	F1G1C104A081	S.M.CAP	16V	100nF
C8047	F1G1C104A081	S.M.CAP	16V	100nF
C8048	F1G1C104A081	S.M.CAP	16V	100nF
C8049	F1G1C104A081	S.M.CAP	16V	100nF
C8050	F1G1C104A081	S.M.CAP	16V	100nF
C8051	F1G1C104A081	S.M.CAP	16V	100nF
C8052	ECJ1VB1C105K	SMD	16V	1000nF
C8053	F1G1E1030005	S.M.CAP	25V	10nF
C8056	F1G1C104A081	S.M.CAP	16V	100nF
C8057	F1G1C104A081	S.M.CAP	16V	100nF
C8058	F1J1A106A043	CERAMIC	10V	10µF
C8067	F1G1E1030005	S.M.CAP	25V	10nF
C8068	F1G1C104A081	S.M.CAP	16V	100nF
C8069	F1G1H820A565	S.M.CAP	50V	82pF
C8070	F1G1C104A081	S.M.CAP	16V	100nF
C8071	F1G1C104A081	S.M.CAP	16V	100nF
C8072	F1G1C104A081	S.M.CAP	16V	100nF
C8073	F1G1C104A081	S.M.CAP	16V	100nF
C8074	F1G1C104A081	S.M.CAP	16V	100nF
C8075	F1J0G2260001	S.M.CAP	4V	22µF
C8076	F1G1C104A081	S.M.CAP	16V	100nF
C8077	F1G1C104A081	S.M.CAP	16V	100nF
C8078	F1G1C104A081	S.M.CAP	16V	100nF
C8079	F1G1C104A081	S.M.CAP	16V	100nF
C8080	F1G1C104A081	S.M.CAP	16V	100nF
C8301	F1G1E1030005	S.M.CAP	25V	10nF
C8304	F1G1C104A081	S.M.CAP	16V	100nF
C8306	F1G1H1020008	S.M.CAP	50V	1nF
C8307	F1G1C104A081	S.M.CAP	16V	100nF
C8309	F1G1C104A081	S.M.CAP	16V	100nF
C8310	EEEHB1C101UP	ELECT	16V	100µF
C8311	F1H1H1500009	SMD	50V	15pF
C8312	F1H1H1200004	S.M.CAP	50V	12pF
C8313	F1G1E1030005	S.M.CAP	25V	10nF
C8314	F1G1E1030005	S.M.CAP	25V	10nF
C8316	EEEHB1C470P	ELECT	16V	47µF
C8319	F1G1E1030005	S.M.CAP	25V	10nF
C8320	F1G1E1030005	S.M.CAP	25V	10nF
C8321	F1G1E1030005	S.M.CAP	25V	10nF
C8322	F1G1C104A081	S.M.CAP	16V	100nF
C8323	F1G1H220A565	S.M.CAP	50V	22pF
C8324	F1G1H220A565	S.M.CAP	50V	22pF

Cct Ref	Parts Number	Description		
C8325	F1G1E1030005	S.M.CAP	25V	10nF
C8327	ECJ1VB1C105K	SMD	16V	1000nF
C8328	ECJ1VB1C105K	SMD	16V	1000nF
C8329	F1G1E1030005	S.M.CAP	25V	10nF
C8330	F1G1E1030005	S.M.CAP	25V	10nF
C8331	F1G1E1030005	S.M.CAP	25V	10nF
C8332	F1G1E1030005	S.M.CAP	25V	10nF
C8333	F1G1E1030005	S.M.CAP	25V	10nF
C8334	F1G1E1030005	S.M.CAP	25V	10nF
C8335	F1G1E1030005	S.M.CAP	25V	10nF
C8336	F1G1E1030005	S.M.CAP	25V	10nF
C8338	F1G1H220A565	S.M.CAP	50V	22pF
C8339	F1G1H220A565	S.M.CAP	50V	22pF
C8340	F1G1E1030005	S.M.CAP	25V	10nF
C8402	F1G1C104A081	S.M.CAP	16V	100nF
C8403	F1G1C104A081	S.M.CAP	16V	100nF
C8404	F1G1C104A081	S.M.CAP	16V	100nF
C8405	F1G1C104A081	S.M.CAP	16V	100nF
C8406	F1G1C104A081	S.M.CAP	16V	100nF
C8407	F1G1C104A081	S.M.CAP	16V	100nF
C8408	F1G1C104A081	S.M.CAP	16V	100nF
C8409	F1G1C104A081	S.M.CAP	16V	100nF
C8410	F1G1C104A081	S.M.CAP	16V	100nF
C8411	EEEHB1C101UP	ELECT	16V	100µF
C8412	F1G1C104A081	S.M.CAP	16V	100nF
C8413	F1G1C104A081	S.M.CAP	16V	100nF
C8414	F1G1C104A081	S.M.CAP	16V	100nF
C8416	F1G1E1030005	S.M.CAP	25V	10nF
C8417	F1G1E1030005	S.M.CAP	25V	10nF
C8553	F1G1C104A081	S.M.CAP	16V	100nF
C8554	F1G1C104A081	S.M.CAP	16V	100nF
C8555	F1G1C104A081	S.M.CAP	16V	100nF
C8601	F1G1C104A081	S.M.CAP	16V	100nF
C8621	F1G1C104A081	S.M.CAP	16V	100nF
C8622	F1G1C104A081	S.M.CAP	16V	100nF
C8801	F1J1H474A757	S.M.CAP	50V	470nF

TERMINALS AND LINKS

.	K4AZ01D00004	EARTH LUG
.	K9ZZ00000424	EARTH LUG
DG1	K1KA08A00506	8P CONNECTOR
DG1-V1	TXJDG1MUA	DG1-V1 WIRE
DG5	K1KB31BA0064	31P CONNECTOR
DG7	K1KA03AA0190	3P CONNECTOR
DG7-SP	TXJDG7MUA	DG7-SPK L WIRE
DG8	K1KA03AA0190	3P CONNECTOR
DG8-SP	TXJDG8MUA	DG8-SPK R WIRE
DG9	K1KA02B00247	2P CONNECTOR
DG11	K1KA06BA0047	6P CONNECTOR
DG13	K1KA23A00005	23P CONNECTOR
DG32	K1KA07AA0266	7P CONNECTOR
DG33	K1KA11AA0715	11P CONNECTOR
DG51	K1KA15A00148	15P CONNECTOR
G51	K1KA15AA0194	15P CONNECTOR
JK2002	K2HA204A0053	AUDIO TERMINAL
JK3001	K1FB315A0006	PC TERMINAL
JK3002	K1FB121A0010	SCART SOCKET
JK3003	K1FB121A0010	SCART SOCKET
JK3004	K2HA303A0023	YUV TERMINAL
JK3005	K2HA204A0053	AUDIO TERMINAL
JK3700	K4AK18B00004	AV3 TERMINAL
JK4500	K1FY119D0002	HDMI TERMINAL
JK4501	K1FY119D0002	HDMI TERMINAL
JK8401	K1NA68B00044	CI SLOT
JK8702	K1KA04AA0104	4P CONNECTOR
JK8801	K1NA09D00004	SD SLOT
P1	K1KA03A00608	3P CONNECTOR
P2	K1KA08AA0192	8P CONNECTOR

Cct Ref	Parts Number	Description			
P2-INV	TXJP2MUA	P2/DG11-INV WIRE			
P4	K1KB23A00004	23P CONNECTOR			
P5	K1KB23A00004	23P CONNECTOR			
P6	K1KA08AA0192	8P CONNECTOR			
P7	K1KA03AA0190	3P CONNECTOR			
P7-DG	TXJP7MUA	P7-DG WIRE			
TNR-TN	TXJTNR0MUA	TUNER TO TUNER WIRE			
V1	K1KA08BA0061	8P CONNECTOR			
SWITCHES					
SW801	ESB92DA1B	SWITCH			⚠

DIFFERENCES FOR MODEL TX--26LMD70A

Cct Ref	Parts Number	Description			
EXPLODED VIEW					
15	TXASX01MTA	AC CORD			⚠
16	TKU0E0201	BACK COVER			⚠
17	TTY0E0136	CABINET			
18	TUA0E1600	CHASSIS FRAME			
19	DG-26LMD70A	DG P.C.B.	X	RTL	⚠
20	TKZ0E9354	L LCD BOTTOM MTG			
22	TKZ0E9350-1	L LCD TOP MTG			
23	TKZ0E9352	L/R LCD MTG			
25	TKZ0E9413	LCD BOTTOM MTG			
26	L5EDD6Q00026	LCD PANEL			⚠
27	TBM0E1091	MODEL LABEL			
28	TBLA0283	PEDESTAL ASSY			
29	TKZ0E9355	R LCD BOTTOM MTG			
31	TKZ0E9351-1	R LCD TOP MTG			
32	ENGF7711GF	TUNER			
MISCELLANEOUS COMPONENTS					
.	TBM0E9012	AV LABEL			
.	TMK0E118	FELT			
.	TPC0E71801	CARTON			
.	TPD0E0142	TOP CUSHION			
.	TPD0E0143-1	BOTTOM CUSHION			
.	TPD0E9096	BOTTOM PAD			
.	TUA0E9563	L LCD FIXING PLATE			
.	TUA0E9564	R LCD FIXING PLATE			
INSTRUCTION BOOKS					
.	TQB0E0508	ENGLISH			
I.C.s					
IC8554	TVRP375-7	FLASH			
IC8601	X24C26LMD70A	EEPROM			
TERMINALS AND LINKS					
DG5-PAN	TXJDG5MTA	DG5-PANEL WIRE			
DG51-G51	TXJDG51MZA	DG51-G51 WIRE			

DIFFERENCES FOR MODEL TX--26LMD70FA

Cct Ref	Parts Number	Description			
EXPLODED VIEW					
15	TXASX01MZA	AC CORD			⚠
16	TKU0E0201	BACK COVER			⚠
17	TTY0E0184	CABINET			
18	TUA0E1600	CHASSIS FRAME			
19	DG-26LMD70FA	DG P.C.B.	X	RTL	⚠
20	TKZ0E9354	L LCD BOTTOM MTG			
22	TKZ0E9350-1	L LCD TOP MTG			
23	TKZ0E9352	L/R LCD MTG			
25	TKZ0E9413	LCD BOTTOM MTG			
26	L5EDD6Q00026	LCD PANEL			⚠
27	TBM0E1096	MODEL LABEL			
28	TBLA0283	PEDESTAL ASSY			
29	TKZ0E9355	R LCD BOTTOM MTG			
31	TKZ0E9351-1	R LCD TOP MTG			
32	ENGF7701GF	TUNER			
MISCELLANEOUS COMPONENTS					
.	TBM0E9011	AV LABEL			
.	TMK0E118	FELT			
.	TPC0E71801	CARTON			
.	TPD0E0142	TOP CUSHION			
.	TPD0E0143-1	BOTTOM CUSHION			
.	TPD0E9096	BOTTOM PAD			
.	TUA0E9563	L LCD FIXING PLATE			
.	TUA0E9564	R LCD FIXING PLATE			
INSTRUCTION BOOKS					
.	TQB0E0504A	GERMAN			
.	TQB0E0504C	ITALIAN			
.	TQB0E0504D	FRENCH			
.	TQB0E0504E	SPANISH			
.	TQB0E0504F	SWEDISH			
.	TQB0E0504H	FINNISH			
.	TQB0E0504K	DANISH			
.	TQB0E0504R	CZECH			
.	TQB0E0504U	ENGLISH			
I.C.s					
IC8554	TVRP526-8	FLASH			
IC8601	24C26LMD70FA	EEPROM			
TERMINALS AND LINKS					
DG5-PAN	TXJDG5MTA	DG5-PANEL WIRE			
DG51-G51	TXJDG51MZA	DG51-G51 WIRE			

DIFFERENCES FOR MODEL TX--26LMD71FA

Cct Ref	Parts Number	Description			
EXPLODED VIEW					
15	TXASX01MZA	AC CORD			⚠
16	TKU0E0201	BACK COVER			⚠
17	TTY0E0184	CABINET			
18	TUA0E1600	CHASSIS FRAME			
19	DG-26LMD70FA	DG P.C.B.	X	RTL	⚠
20	TKZ0E9354	L LCD BOTTOM MTG			
22	TKZ0E9350-1	L LCD TOP MTG			
23	TKZ0E9352	L/R LCD MTG			
25	TKZ0E9413	LCD BOTTOM MTG			
26	L5EDD6Q00026	LCD PANEL			⚠
27	TBM0E1112	MODEL LABEL			
28	TBLA0283	PEDESTAL ASSY			
29	TKZ0E9355	R LCD BOTTOM MTG			
31	TKZ0E9351-1	R LCD TOP MTG			
32	ENGF7701GF	TUNER			
MISCELLANEOUS COMPONENTS					
.	TBM0E9011	AV LABEL			
.	TMK0E118	FELT			
.	TPC0E71801	CARTON			
.	TPD0E0142	TOP CUSHION			
.	TPD0E0143-1	BOTTOM CUSHION			
.	TPD0E9096	BOTTOM PAD			
.	TUA0E9563	L LCD FIXING PLATE			
.	TUA0E9564	R LCD FIXING PLATE			
INSTRUCTION BOOKS					
.	TQB0E0519D	FRENCH			
.	TQB0E0519U	ENGLISH			
I.C.s					
IC8554	TVRP526-8	FLASH			
IC8601	24C26LMD70FA	EEPROM			
TERMINALS AND LINKS					
DG5-PAN	TXJDG5MTA	DG5-PANEL WIRE			
DG51-G51	TXJDG51MZA	DG51-G51 WIRE			

DIFFERENCES FOR MODEL TX--32LMD70A

Cct Ref	Parts Number	Description			
EXPLODED VIEW					
15	TXASX01MSA	AC CORD			⚠
16	TKU0E0203	BACK COVER			⚠
17	TTY0E0140-2	CABINET			
18	TUA0E1700	CHASSIS FRAME			
19	DG-32LMD70A	DG P.C.B.	X	RTL	⚠
20	TKZ0E9382	L LCD BOTTOM MTG			
21	TKZ0E9380	L LCD MTG			
24	TKZ0E9555	L/R LCD TOP MTG			
25	TKZ0E9414	LCD BOTTOM MTG			
26	L5EDD8Q00037	LCD PANEL			⚠
27	TBM0E1059	MODEL LABEL			
28	TBLA0282	PEDESTAL ASSY			
29	TKZ0E9383	R LCD BOTTOM MTG			
30	TKZ0E9381	R LCD MTG			
32	ENGF7711GF	TUNER			
MISCELLANEOUS COMPONENTS					
.	TBM0E1035-2	AV LABEL			
.	TMK0E089	FELT			
.	TMK0E090	FELT			
.	TMK0E119	FELT			
.	TPC0E72201	CARTON			
.	TPD0E0150	TOP CUSHION			
.	TPD0E0151-1	BOTTOM CUSHION			
.	TPD0E9095	BOTTOM PAD			
.	TUA0E9565	L LCD FIXING PLATE			
.	TUA0E9566	R LCD FIXING PLATE			
FK304	TEWA293	GASKET (15X24X14)			
INSTRUCTION BOOKS					
.	TQB0E0508	ENGLISH			
I.C.s					
IC8554	TVRP375-7	FLASH			
IC8601	X24C32LMD70A	EEPROM			
TERMINALS AND LINKS					
DG5-PAN	TXJDG5MUA	DG5-PANEL WIRE			
DG51-G51	TXJDG51MUA	DG51-G51 WIRE			
P6-INV	TXJP6MUA	P6-INV WIRE			

DIFFERENCES FOR MODEL TX--32LMD70FA

Cct Ref	Parts Number	Description			
EXPLODED VIEW					
15	TXASX01MUA	AC CORD			⚠
16	TKU0E0203	BACK COVER			⚠
17	TTY0E0185-2	CABINET			
18	TUA0E1700	CHASSIS FRAME			
19	DG-32LMD70FA	DG P.C.B.	X	RTL	⚠
20	TKZ0E9382	L LCD BOTTOM MTG			
21	TKZ0E9380	L LCD MTG			
24	TKZ0E9555	L/R LCD TOP MTG			
25	TKZ0E9414	LCD BOTTOM MTG			
26	L5EDD8Q00037	LCD PANEL			⚠
27	TBM0E1041	MODEL LABEL			
28	TBLA0282	PEDESTAL ASSY			
29	TKZ0E9383	R LCD BOTTOM MTG			
30	TKZ0E9381	R LCD MTG			
32	ENGF7701GF	TUNER			
MISCELLANEOUS COMPONENTS					
.	TBM0E9008	AV LABEL			
.	TMK0E089	FELT			
.	TMK0E090	FELT			
.	TMK0E119	FELT			
.	TPC0E72201	CARTON			
.	TPD0E0150	TOP CUSHION			
.	TPD0E0151-1	BOTTOM CUSHION			
.	TPD0E9095	BOTTOM PAD			
.	TUA0E9565	L LCD FIXING PLATE			
.	TUA0E9566	R LCD FIXING PLATE			
FK304	TEWA293	GASKET (15X24X14)			
INSTRUCTION BOOKS					
.	TQB0E0504A	GERMAN			
.	TQB0E0504C	ITALIAN			
.	TQB0E0504D	FRENCH			
.	TQB0E0504E	SPANISH			
.	TQB0E0504F	SWEDISH			
.	TQB0E0504H	FINNISH			
.	TQB0E0504K	DANISH			
.	TQB0E0504R	CZECH			
.	TQB0E0504U	ENGLISH			
I.C.s					
IC8554	TVRP526-8	FLASH			
IC8601	24C32LMD70FA	EEPROM			
TERMINALS AND LINKS					
DG5-PAN	TXJDG5MUA	DG5-PANEL WIRE			
DG51-G51	TXJDG51MUA	DG51-G51 WIRE			
P6-INV	TXJP6MUA	P6-INV WIRE			

DIFFERENCES FOR MODEL TX--32LMD71FA

Cct Ref	Parts Number	Description			
EXPLODED VIEW					
15	TXASX01MUA	AC CORD			⚠
16	TKU0E0203	BACK COVER			⚠
17	TTY0E0185-2	CABINET			
18	TUA0E1700	CHASSIS FRAME			
19	DG-32LMD70FA	DG P.C.B.	X	RTL	⚠
20	TKZ0E9382	L LCD BOTTOM MTG			
21	TKZ0E9380	L LCD MTG			
24	TKZ0E9555	L/R LCD TOP MTG			
25	TKZ0E9414	LCD BOTTOM MTG			
26	L5EDD8Q00037	LCD PANEL			⚠
27	TBM0E1111	MODEL LABEL			
28	TBLA0282	PEDESTAL ASSY			
29	TKZ0E9383	R LCD BOTTOM MTG			
30	TKZ0E9381	R LCD MTG			
32	ENGF7701GF	TUNER			
MISCELLANEOUS COMPONENTS					
.	TBM0E9008	AV LABEL			
.	TMK0E089	FELT			
.	TMK0E090	FELT			
.	TMK0E119	FELT			
.	TPC0E72201	CARTON			
.	TPD0E0150	TOP CUSHION			
.	TPD0E0151-1	BOTTOM CUSHION			
.	TPD0E9095	BOTTOM PAD			
.	TUA0E9565	L LCD FIXING PLATE			
.	TUA0E9566	R LCD FIXING PLATE			
FK304	TEWA293	GASKET (15X24X14)			
INSTRUCTION BOOKS					
.	TQB0E0519D	FRENCH			
.	TQB0E0519U	ENGLISH			
I.C.s					
IC8554	TVRP526-8	FLASH			
IC8601	24C32LMD70FA	EEPROM			
TERMINALS AND LINKS					
DG5-PAN	TXJDG5MUA	DG5-PANEL WIRE			
DG51-G51	TXJDG51MUA	DG51-G51 WIRE			
P6-INV	TXJP6MUA	P6-INV WIRE			

DIFFERENCES FOR MODEL TX--32LMD72FA

Cct Ref	Parts Number	Description			
EXPLODED VIEW					
15	TXASX01MUA	AC CORD			⚠
16	TKU0E0203	BACK COVER			⚠
17	TTY0E0185-2	CABINET			
18	TUA0E1700	CHASSIS FRAME			
19	DG-32LMD70FA	DG P.C.B.	X	RTL	⚠
20	TKZ0E9382	L LCD BOTTOM MTG			
21	TKZ0E9380	L LCD MTG			
24	TKZ0E9555	L/R LCD TOP MTG			
25	TKZ0E9414	LCD BOTTOM MTG			
26	L5EDD8Q00037	LCD PANEL			⚠
27	TBM0E1113	MODEL LABEL			
28	TBLA0282	PEDESTAL ASSY			
29	TKZ0E9383	R LCD BOTTOM MTG			
30	TKZ0E9381	R LCD MTG			
32	ENGF7701GF	TUNER			
MISCELLANEOUS COMPONENTS					
.	TBM0E9008	AV LABEL			
.	TMK0E089	FELT			
.	TMK0E090	FELT			
.	TMK0E119	FELT			
.	TPC0E72201	CARTON			
.	TPD0E0150	TOP CUSHION			
.	TPD0E0151-1	BOTTOM CUSHION			
.	TPD0E9095	BOTTOM PAD			
.	TUA0E9565	L LCD FIXING PLATE			
.	TUA0E9566	R LCD FIXING PLATE			
FK304	TEWA293	GASKET (15X24X14)			
INSTRUCTION BOOKS					
.	TQB0E0520E	SPANISH			
.	TQB0E0520F	SWEDISH			
.	TQB0E0520H	FINNISH			
.	TQB0E0520K	DANISH			
.	TQB0E0520U	ENGLISH			
I.C.s					
IC8554	TVRP526-8	FLASH			
IC8601	24C32LMD70FA	EEPROM			
TERMINALS AND LINKS					
DG5-PAN	TXJDG5MUA	DG5-PANEL WIRE			
DG51-G51	TXJDG51MUA	DG51-G51 WIRE			
P6-INV	TXJP6MUA	P6-INV WIRE			

Cct Ref	Parts Number	Description

Schematic Diagrams

IMPORTANT SAFETY NOTICE

Components identified by ⚠ mark have special characteristics important for safety. When replacing any of these components, use only manufacturers' specified parts.

NOTE

1. RESISTOR
   All resistors are carbon ¼W resistor, unless marked otherwise.
   Unit of resistance is OHM (Ω) (k=1,000, M=1,000,000)
2. CAPACITORS
   All capacitors are ceramic 50V unless marked otherwise.
   Unit of capacitance is μF unless otherwise stated.
3. COIL
   Unit of inductance is μH, unless otherwise stated.

4. TEST POINT

   Test Point Position

5. EARTH SYMBOL

   Chassis Earth (Cold)

   Line Earth (Hot)

6. VOLTAGE MEASUREMENT
   Voltage is measured by a D.C. voltmeter.
   Measurement conditions are as follows:

Power source	220V-240V AC, 50Hz
Receiving Signal	Colour Bar signal (RF)
All customer controls	Maximum position

7.

   Indicates the Video signal path

   Indicates the Audio signal path

These schematic diagrams are the latest at time of printing and are subject to change without notice.

REMARKS

a. Do not touch the hot part, or the hot and cold parts at the same time, as you are liable to a shock hazard.

b. Do not short circuit the hot and cold circuits as electrical components may be damaged.

c. Do not connect an instrument, such as an oscilloscope, to the hot and cold circuits simultaneously as this may cause fuse failure. Connect the earth of the instruments to the earth connection of the circuit being measured.

d. Make sure to disconnect the power plug before removing the chassis.

NOTE

1. The Power Supply Circuit contains a circuit area, which uses a separate power supply to isolate the earth connection. The circuit is defined by HOT and COLD indications in the schematic diagram. All circuits, except the Power Circuit, are COLD.

P-BOARD TNP8EPL80 1/2

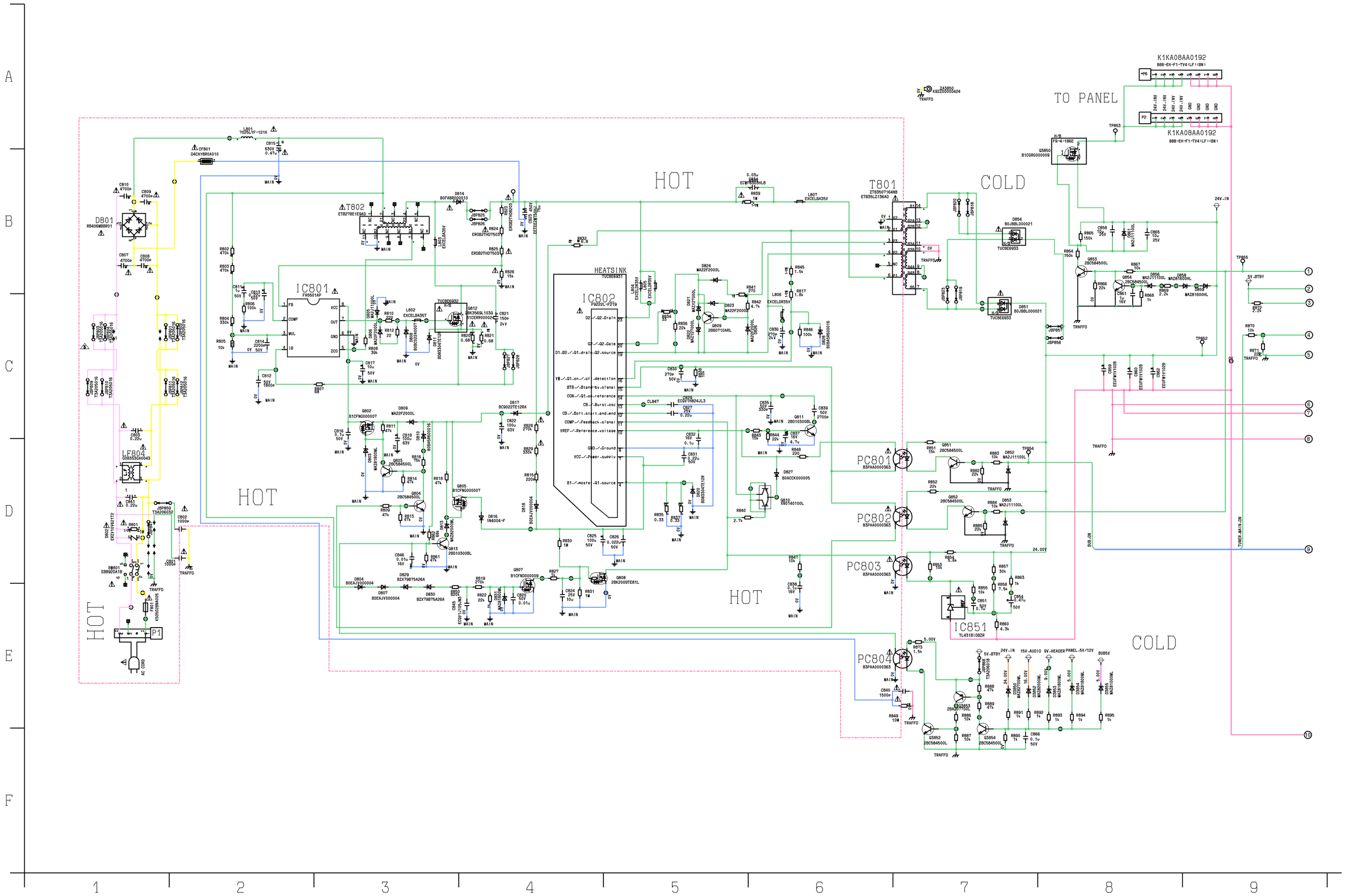

P-BOARD TNP8EPL80 2/2

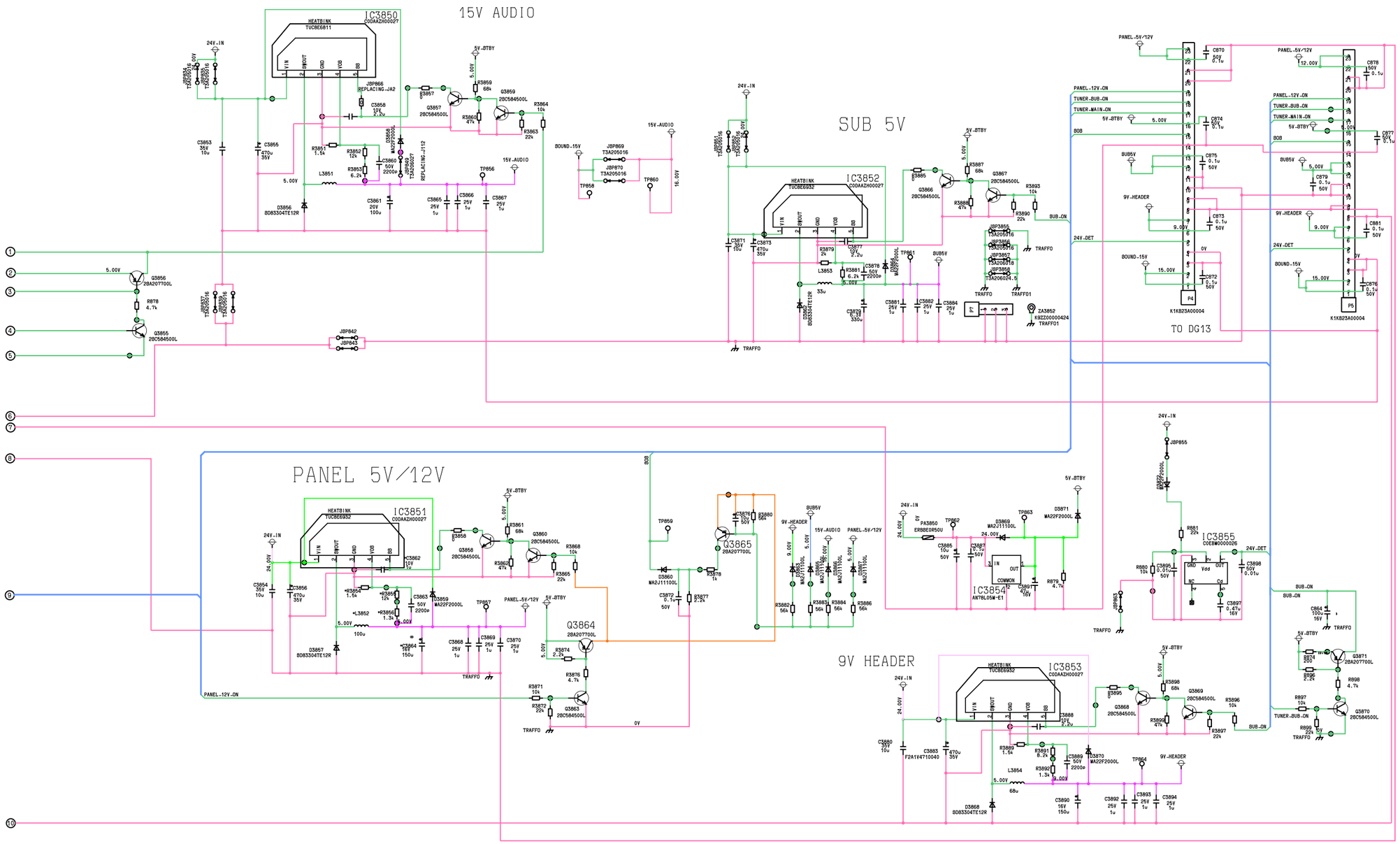

10 11 12 13 14 15 16 17 18

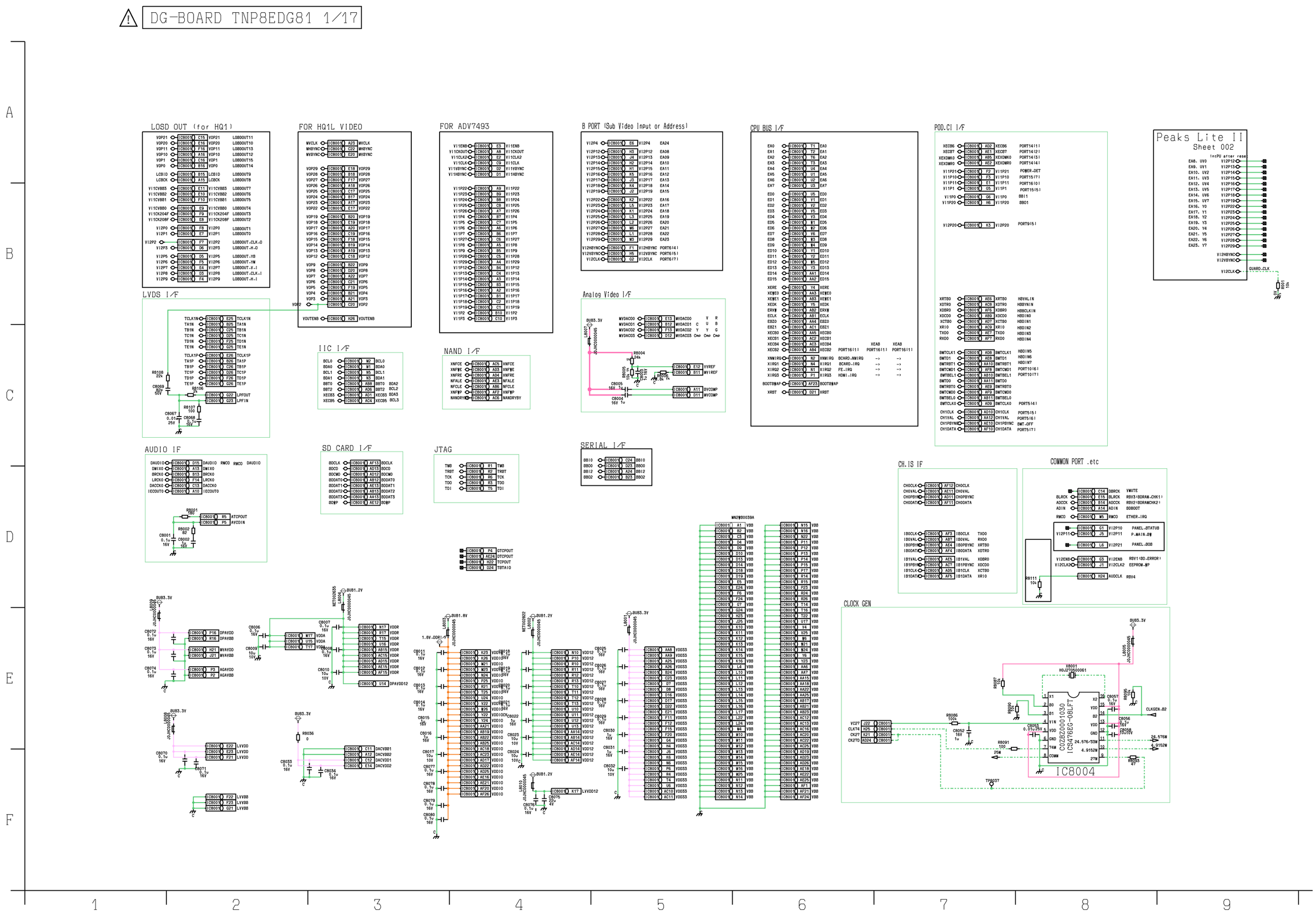
DG-BOARD TNP8EDG81 1/17
LOSD OUT (for HQ1)
FOR HQ1L VIDEO
FOR ADV7493
B PORT (Sub Video Input or Address)
CPU BUS I/F
POD.CI I/F
Peaks Lite II
Sheet 002
LVDS I/F
IIC I/F
NAND I/F
Analog Video I/F
AUDIO IF
SD CARD I/F
JTAG
SERIAL I/F
CH.IS IF
COMMON PORT .etc
CLOCK GEN
IC8004

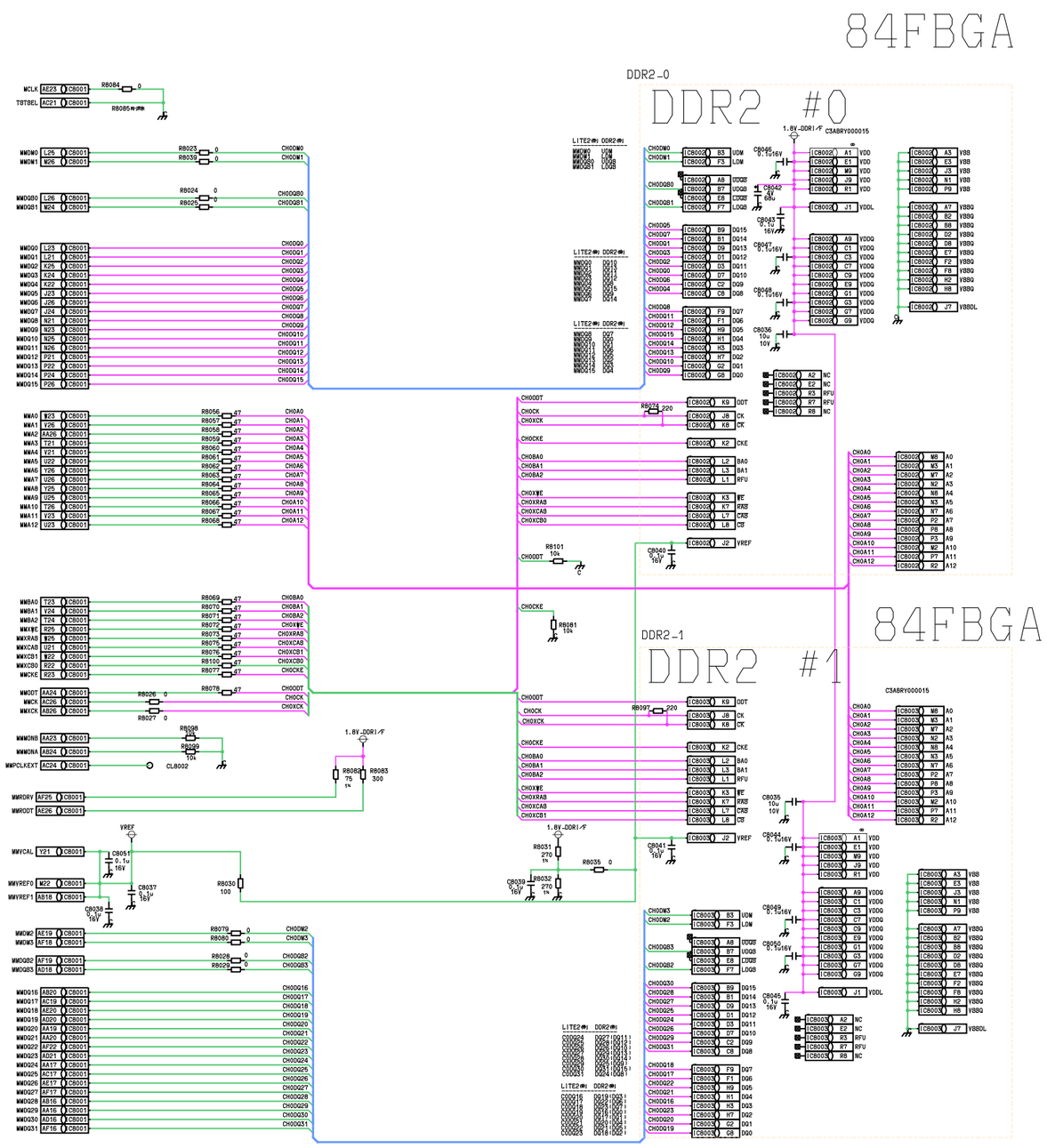
84FBGA
DDR2-0
DDR2 #0
84FBGA
DDR2-1
DDR2 #1

⚠ DG-BOARD TNP8EDG81 3/17

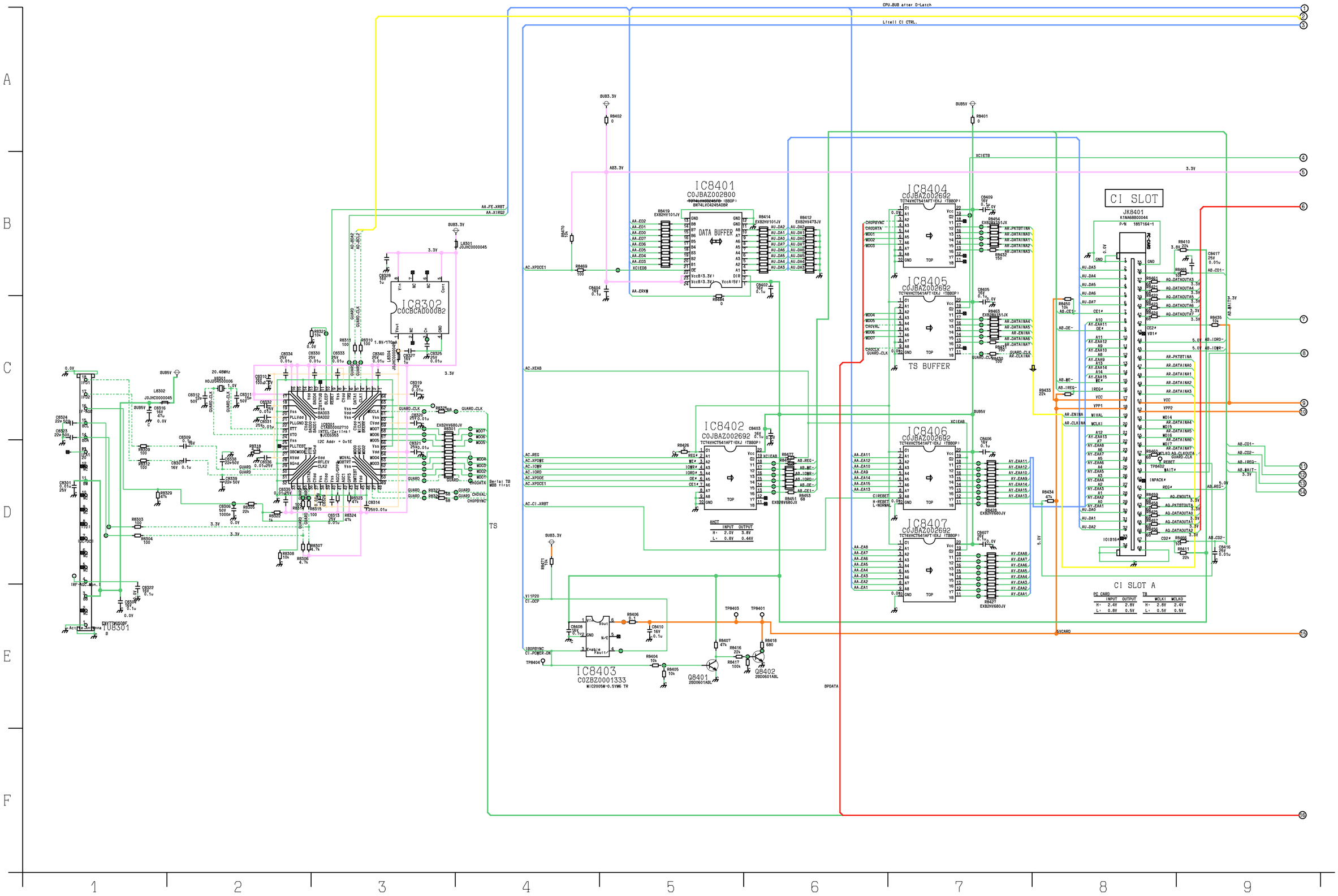

DG-BOARD TNP8EDG81 4/17

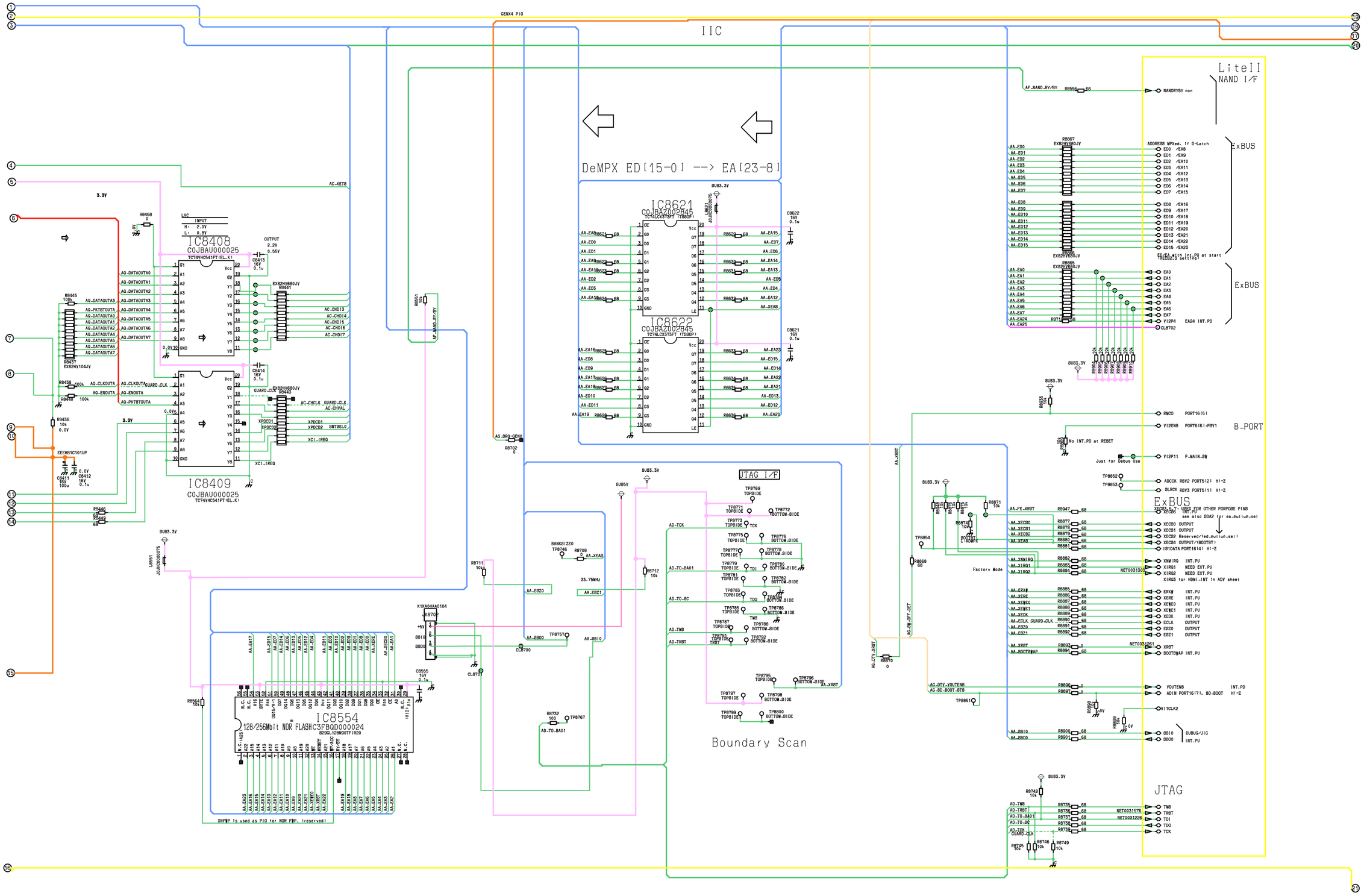

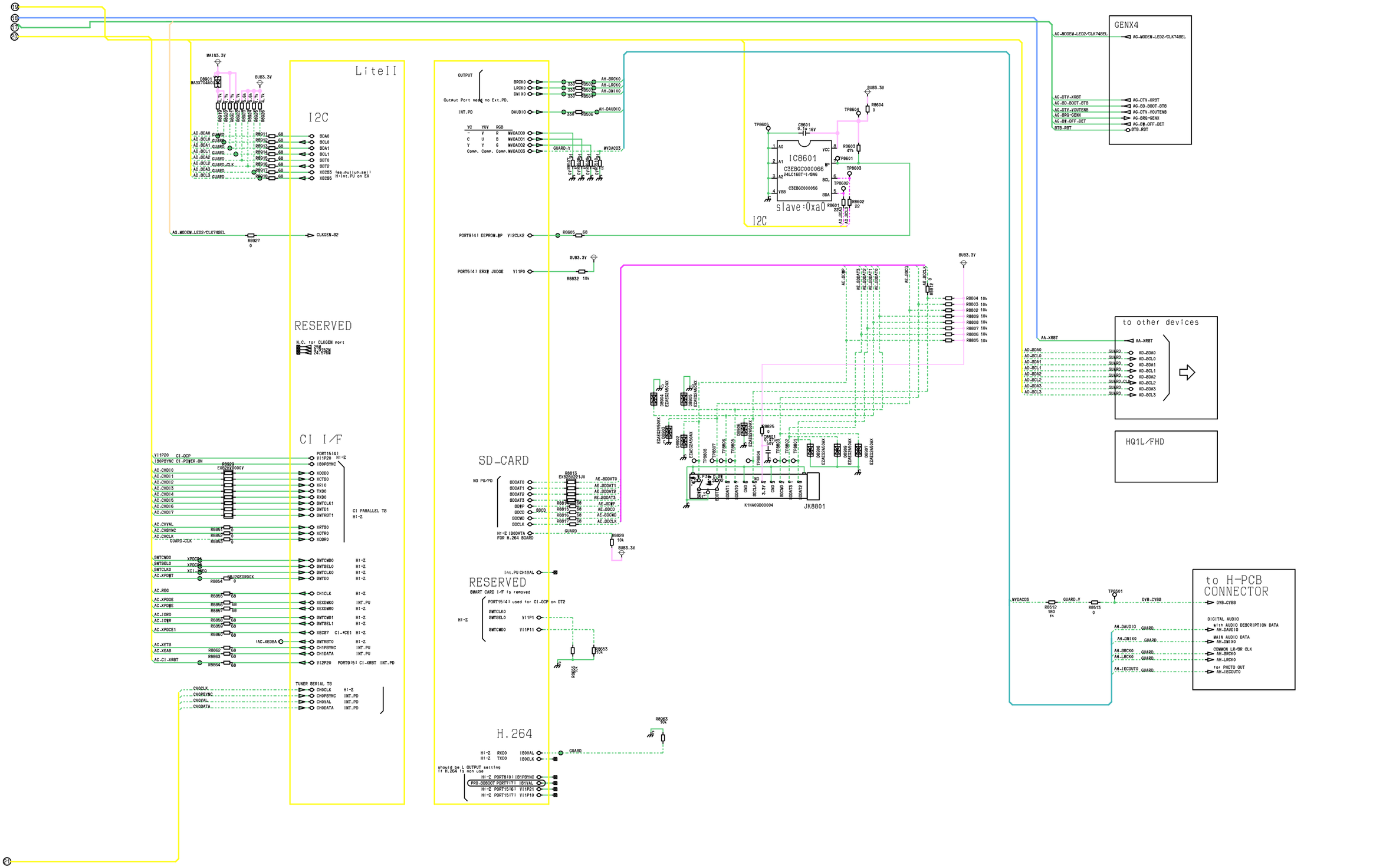
LiteII
I2C
RESERVED
CI I/F
SD-CARD
RESERVED
H.264
IC8601
C3EBGC000066
24LC16BT-I/SNG
slave:0xa0
I2C
JK8801
GENX4
to other devices
HQ1L/FHD
to H-PCB CONNECTOR
DIGITAL AUDIO with AUDIO DESCRIPTION DATA
MAIN AUDIO DATA
COMMON LR/SR CLK
for PHOTO OUT

DG-BOARD TNP8EDG81 6/17

GenX4 POWER/RST

GENX4_POWER_RST

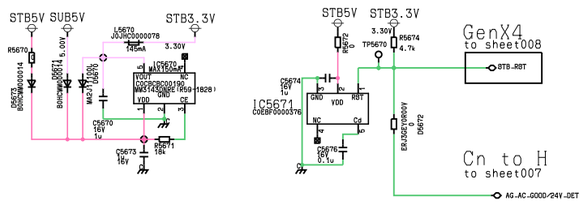

Peaks-LITE2 RST

PEAKS-LITE2_RESET

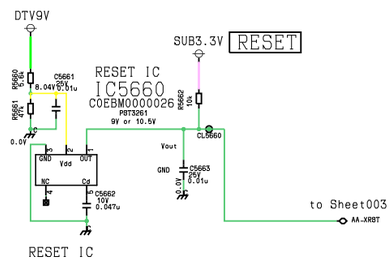

MAIN5V/MAIN3.3V

MAIN5V_MAIN3.3V

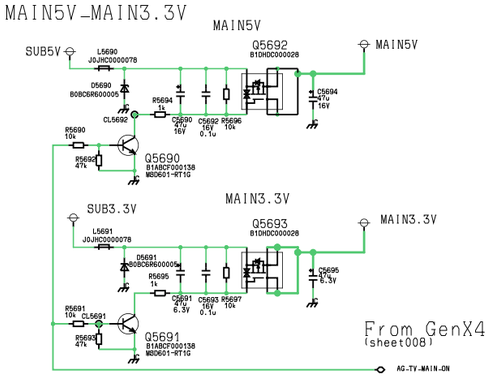

Peaks-LITE2 POWER

PEAKS-LITE2_POWER

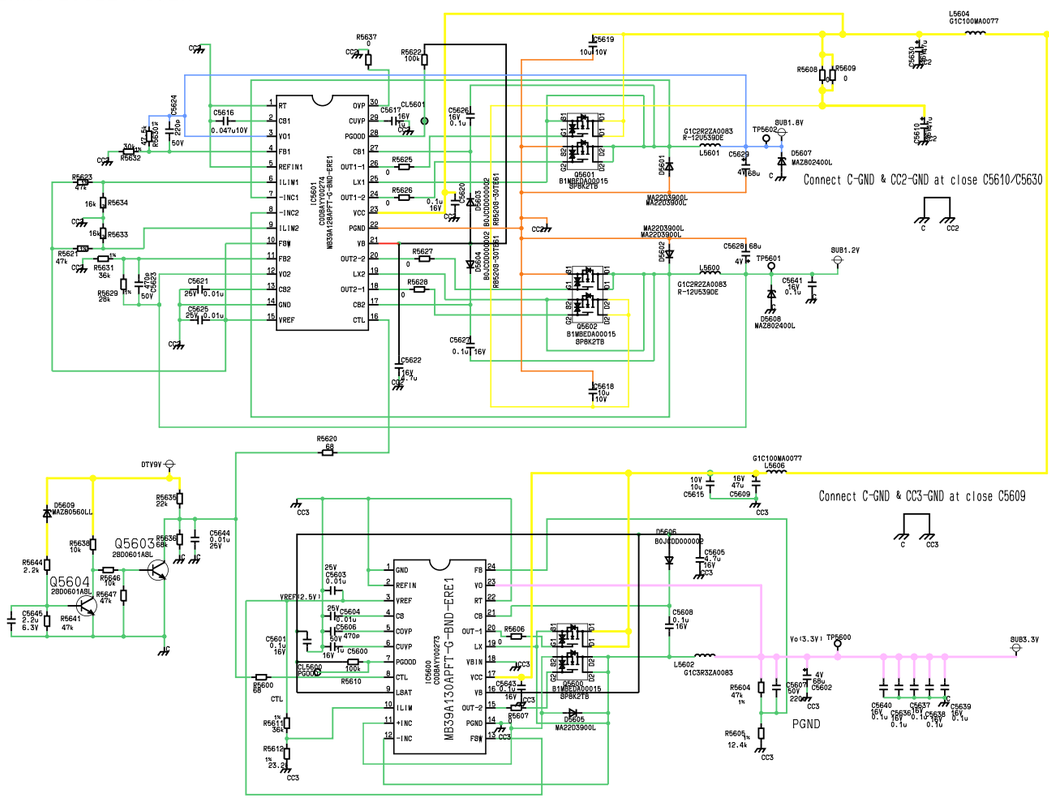

DG-H Connecter

DG-H_CONNECTER

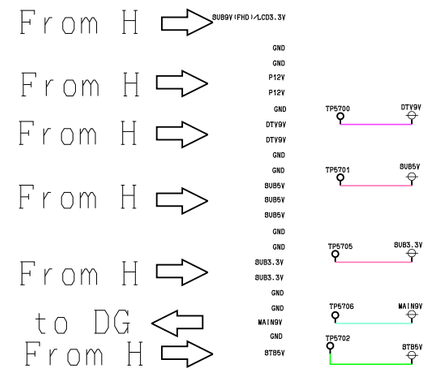

DG-V Connecter

DG-K_CONNECTER

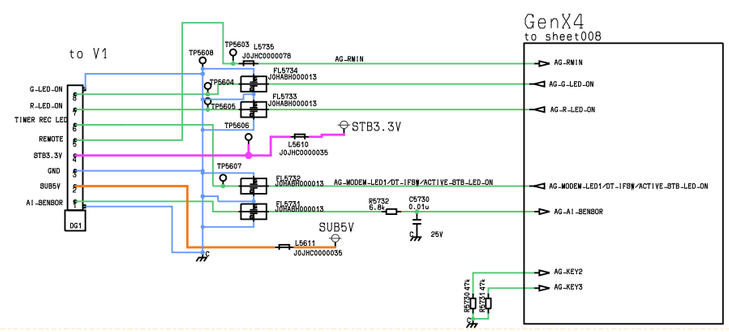

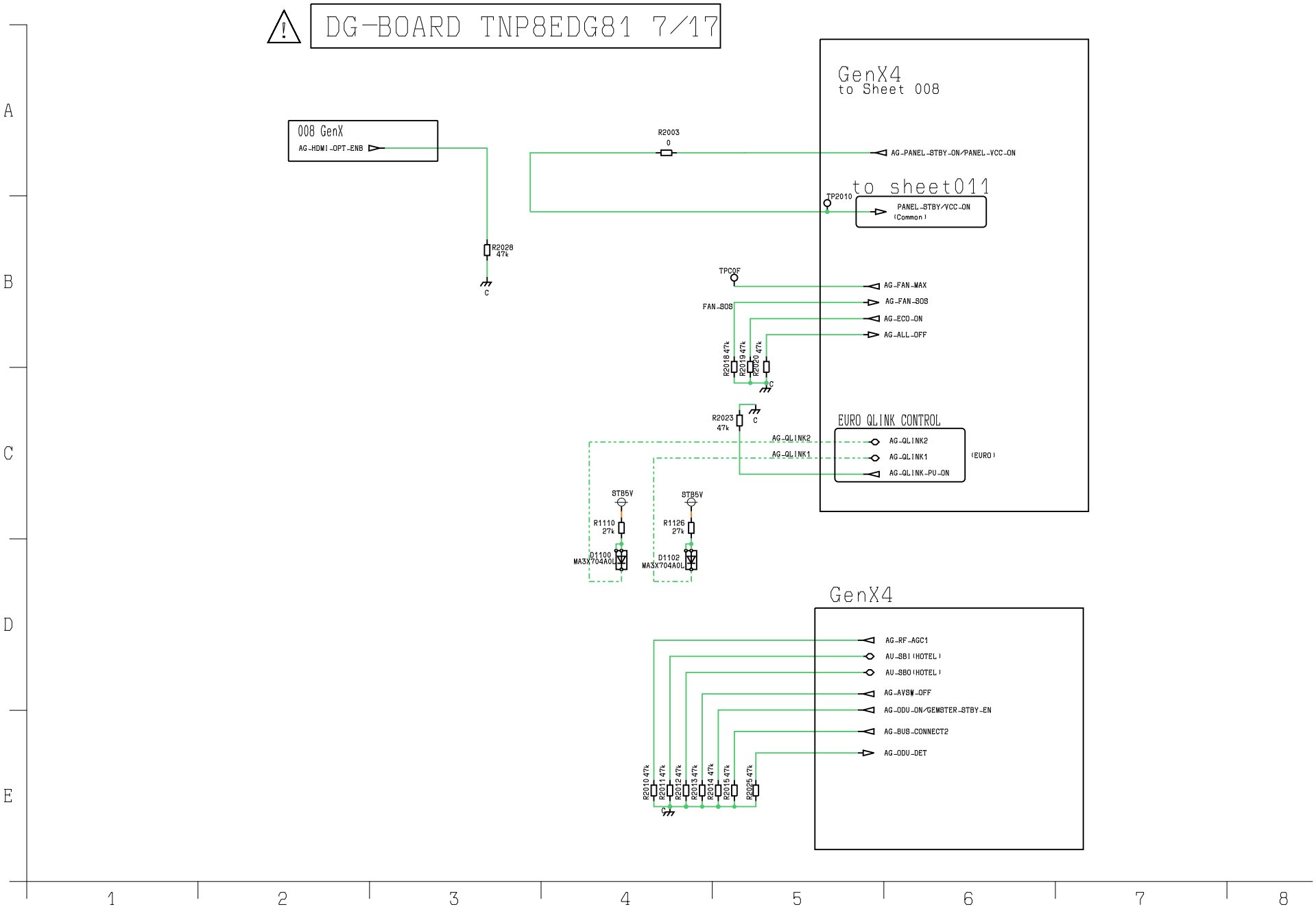
DG-BOARD TNP8EDG81 7/17
GenX4
to Sheet 008
008 GenX
AG_HDMI_OPT_ENB
R2003
0
AG_PANEL_STBY_ON/PANEL_VCC_ON
to sheet011
TP2010
PANEL_STBY/VCC_ON
(Common)
R2028
47k
TPCOF
AG_FAN_MAX
FAN_SOS
AG_FAN_SOS
AG_ECO_ON
AG_ALL_OFF
R2018 47k
R2019 47k
R2020 47k
R2023
47k
EURO QLINK CONTROL
AG_QLINK2
AG_QLINK1
AG_QLINK2
AG_QLINK1
(EURO)
AG_QLINK_PU_ON
STB5V
STB5V
R1110
27k
R1126
27k
D1100
MA3X704A0L
D1102
MA3X704A0L
GenX4
AG_RF_AGC1
AU_SBI(HOTEL)
AU_SBO(HOTEL)
AG_AVSW_OFF
AG_ODU_ON/GEMSTER_STBY_EN
AG_BUS_CONNECT2
AG_ODU_DET
R2010 47k
R2011 47k
R2012 47k
R2013 47k
R2014 47k
R2015 47k
R2025 47k
A
B
C
D
E
1
2
3
4
5
6
7
8

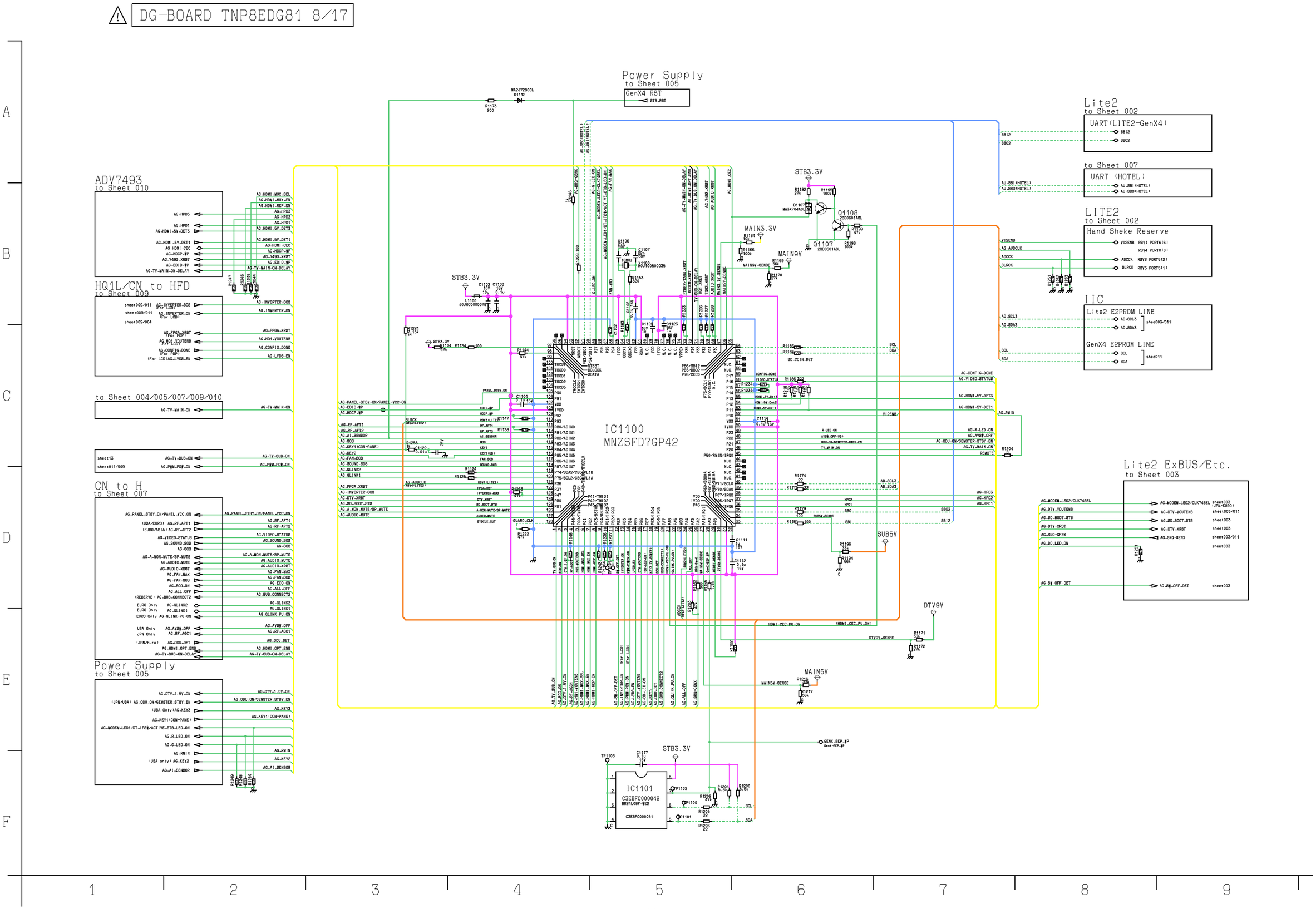
DG-BOARD TNP8EDG81 8/17
Power Supply
to Sheet 005
GenX4 RST
STB-RST
ADV7493
to Sheet 010
HQ1L/CN to HFD
to Sheet 009
to Sheet 004/005/007/009/010
CN to H
to Sheet 007
Power Supply
to Sheet 005
IC1100
MNZSFD7GP42
IC1101
C3EBFC000042
Lite2
to Sheet 002
UART(LITE2-GenX4)
to Sheet 007
UART (HOTEL)
LITE2
to Sheet 002
Hand Shake Reserve
IIC
Lite2 E2PROM LINE
GenX4 E2PROM LINE
Lite2 ExBUS/Etc.
to Sheet 003
STB3.3V
MAIN3.3V
MAIN9V
SUB5V
DTV9V
MAIN5V

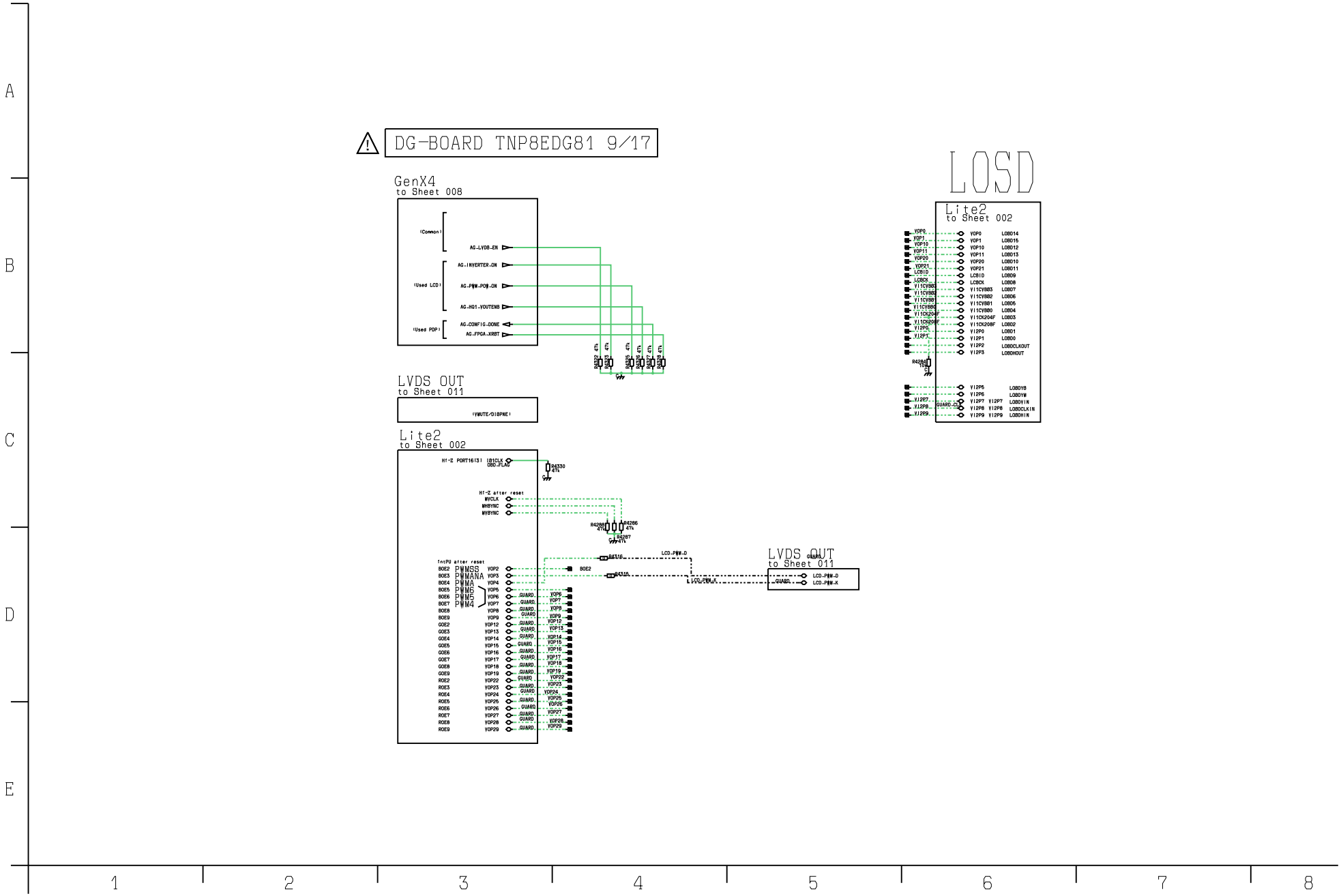
DG-BOARD TNP8EDG81 9/17
GenX4
to Sheet 008
(Common)
AG-LVDS-EN
AG-INVERTER-ON
(Used LCD)
AG-PWM-POW-ON
AG-HG1-VOUTENB
(Used POP)
AG-CONFIG-DONE
AG-FPGA-XRST
LVDS OUT
to Sheet 011
(VMUTE/DIBPME)
Lite2
to Sheet 002
LOSD
Lite2
to Sheet 002
LVDS OUT
to Sheet 011
LCD-PWM-D
LCD-PWM-K
GUARD

⚠ DG-BOARD TNP8EDG81 10/17

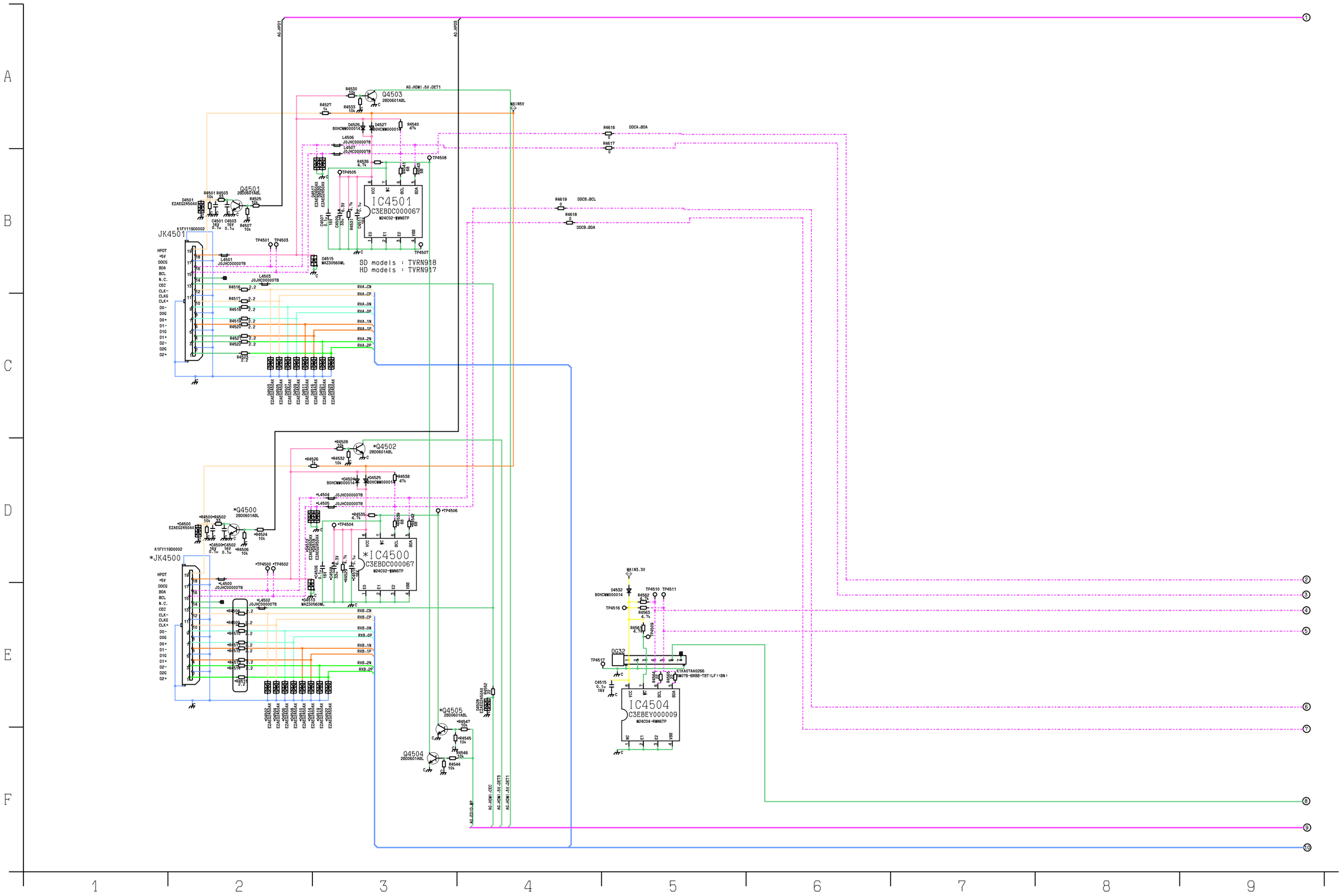

DG-BOARD TNP8EDG81 11/17

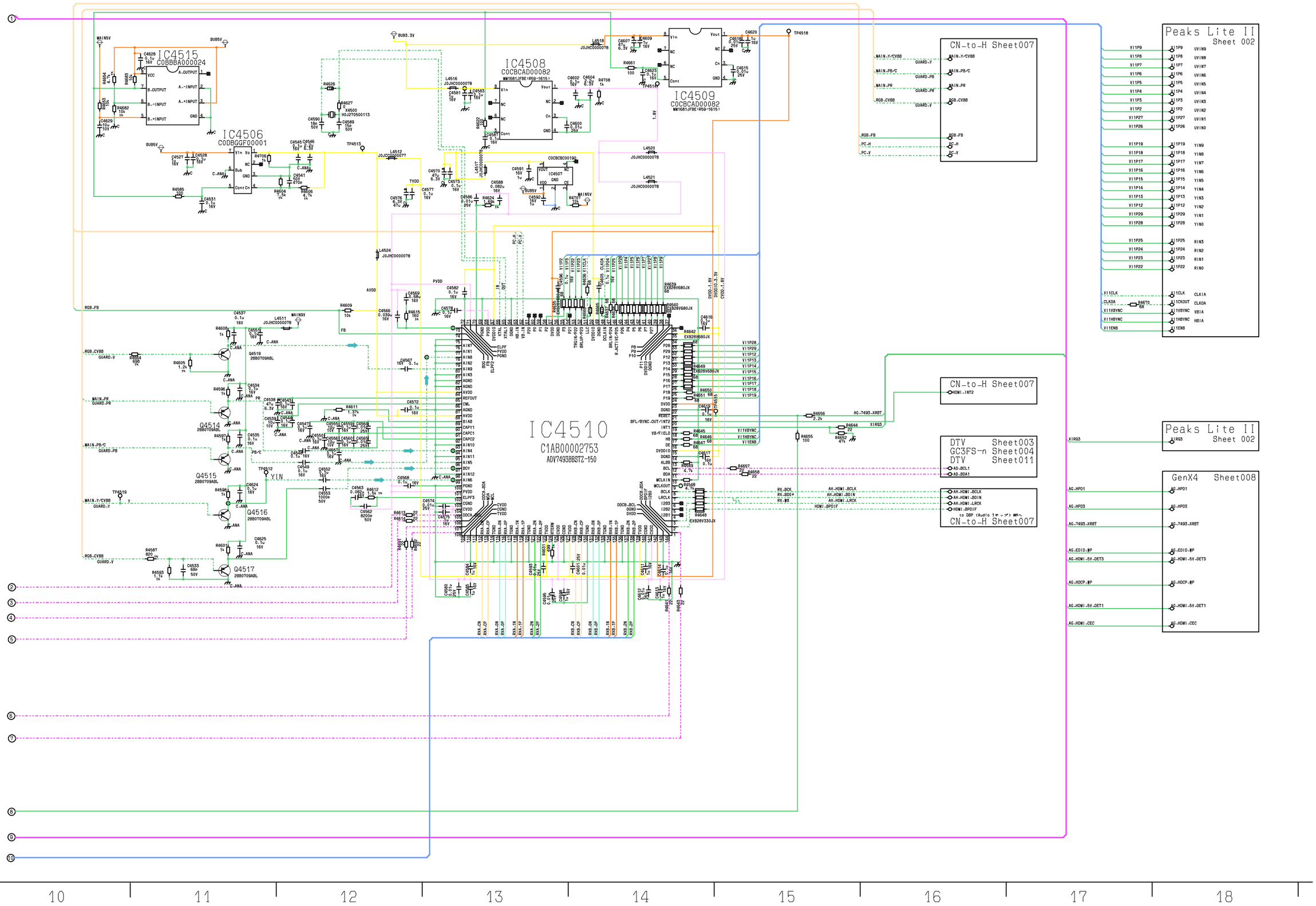

DG-BOARD TNP8EDG81 12/17

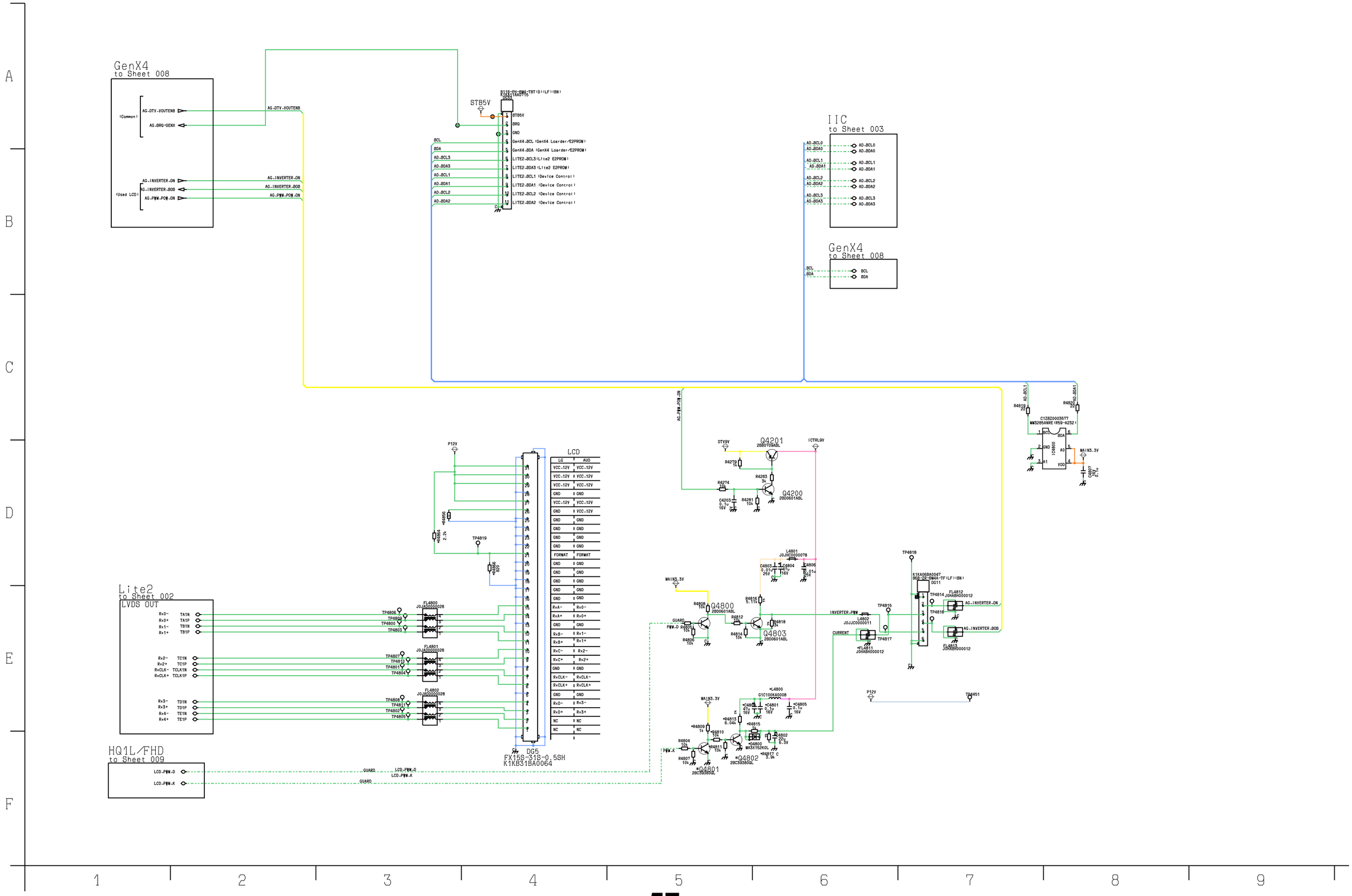

⚠ DG-BOARD TNP8EDG81 13/17

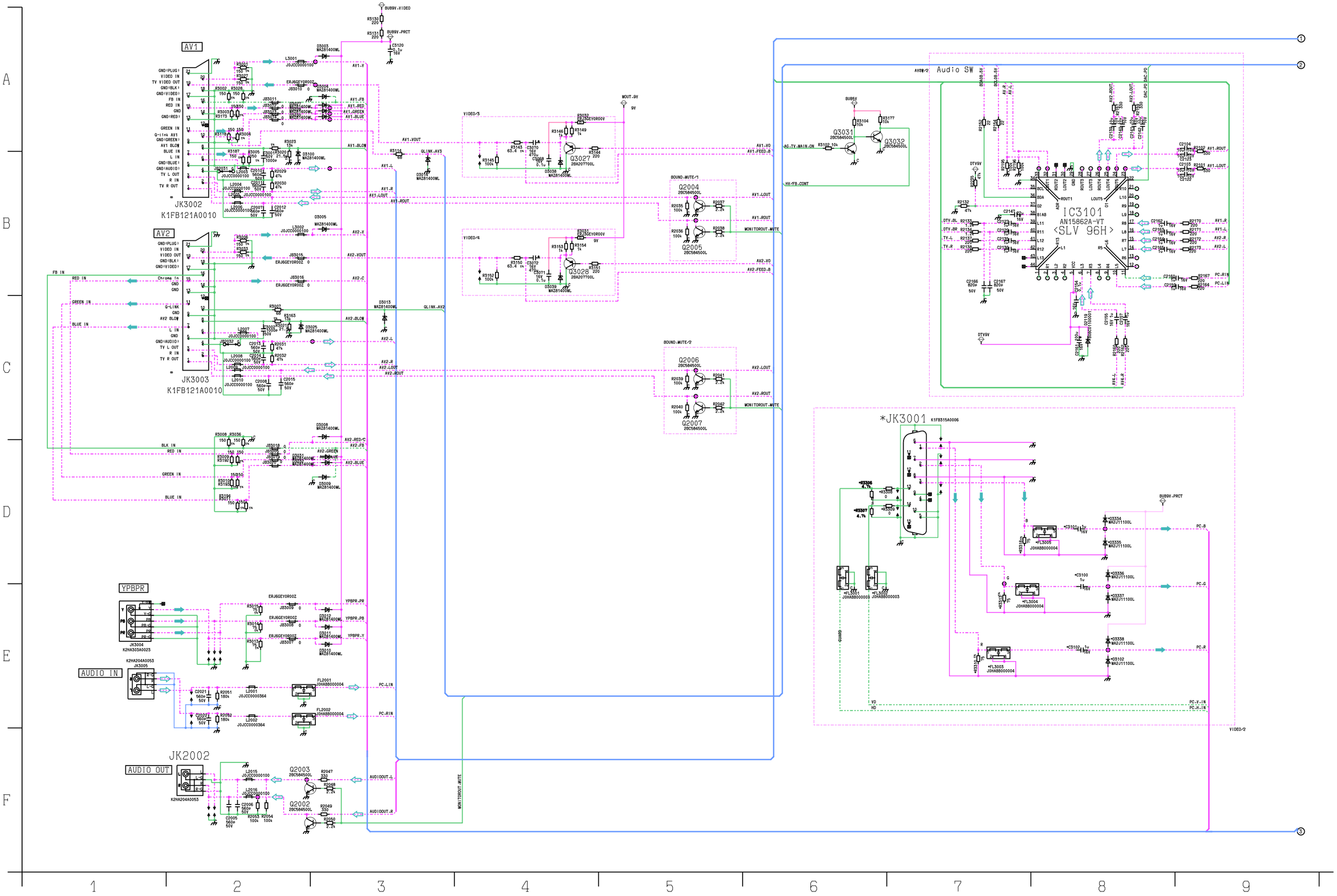

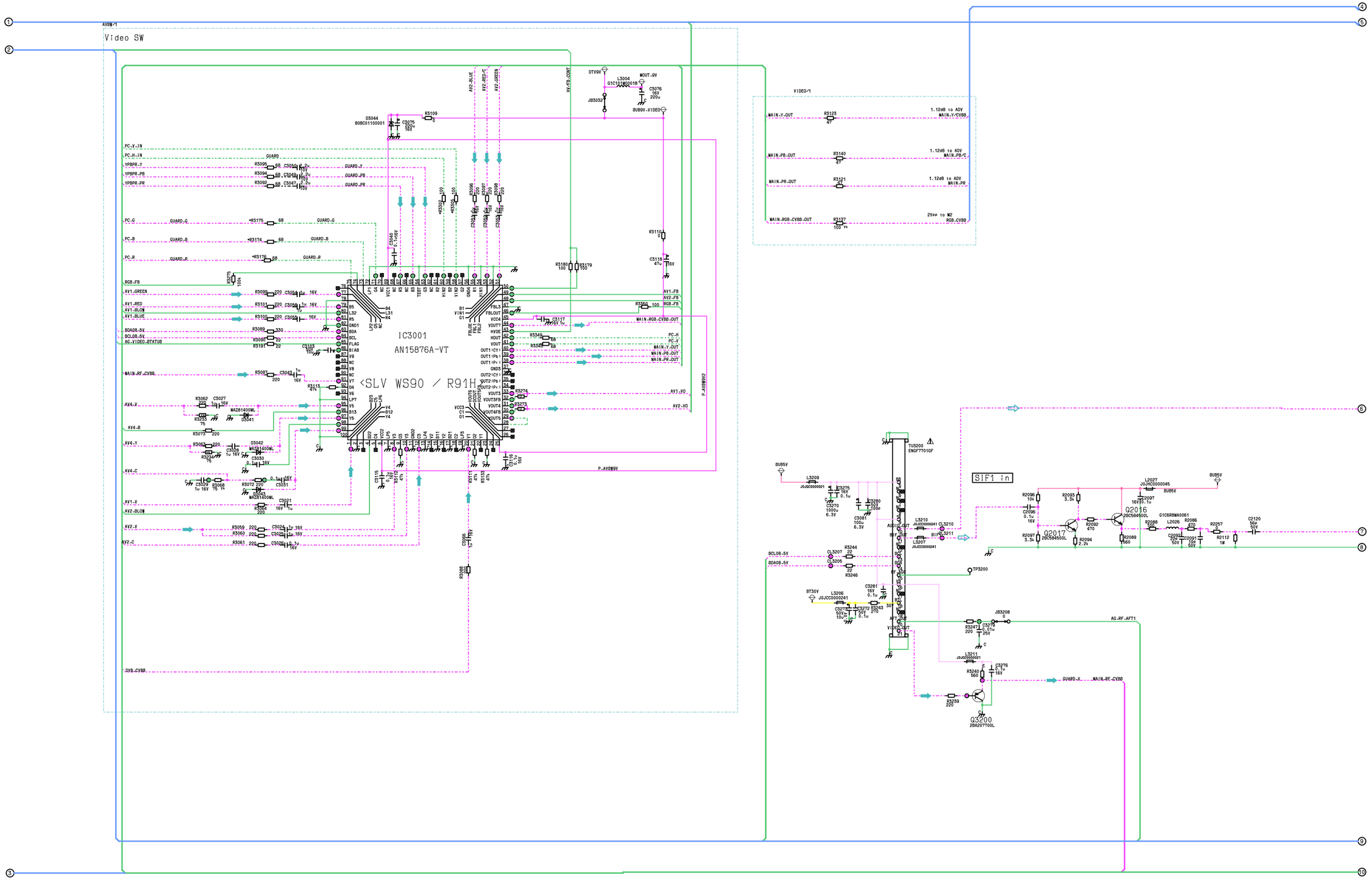
Video SW
IC3001
AN15876A-VT
<SLV WS90 / R91H>
VIDEO-1
SIF1 in
TU3200
ENGF7701GF
Q2016
2SC5045OOL
Q2017
2SC5045OOL
Q3200
2SA2077OOL

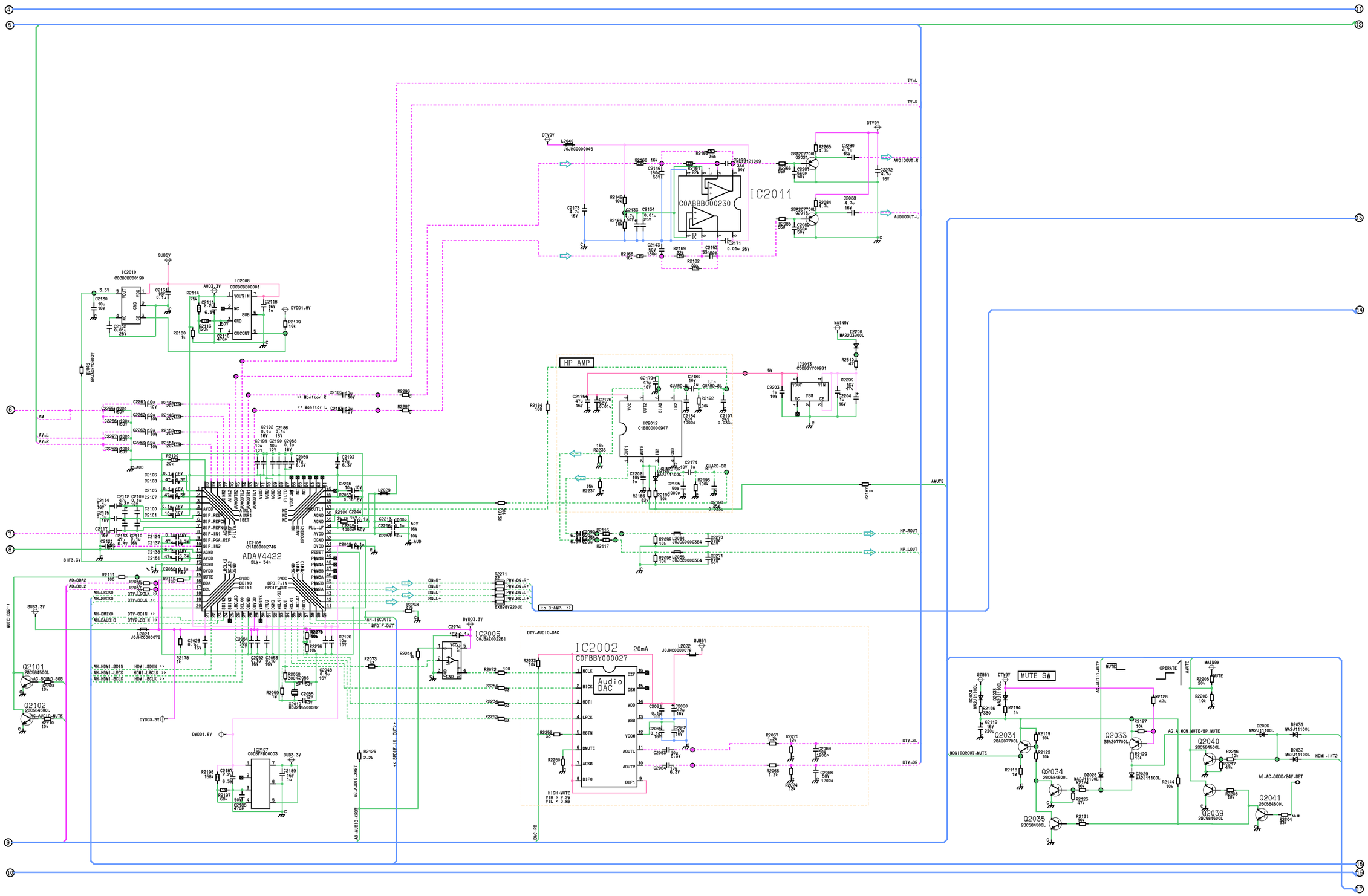
IC2011
C0ABBB000230
IC2010
C0CBCBC00190
IC2008
C0CBCBE00001
HP AMP
IC2013
C0CBGYY00281
IC2012
C1BB000000947
IC2106
C1AB00002746
ADAV4422
IC2006
C0JBA2002261
IC2002
C0FBBY000027
Audio DAC
20mA
IC2107
C0GBFF000003
MUTE SW
Q2101
Q2102
Q2031
Q2033
Q2034
Q2035
Q2040
Q2039
Q2041
TV-L
TV-R
AUDIOUT-R
AUDIOUT-L
HP-ROUT
HP-LOUT
AMUTE
DTY-BL
DTY-BR
DTY-AUDIO-DAC
MONITOROUT-MUTE
HDMI-INT2
AG-AC-GOOD/24V-DET

⚠ DG-BOARD TNP8EDG81 16/17

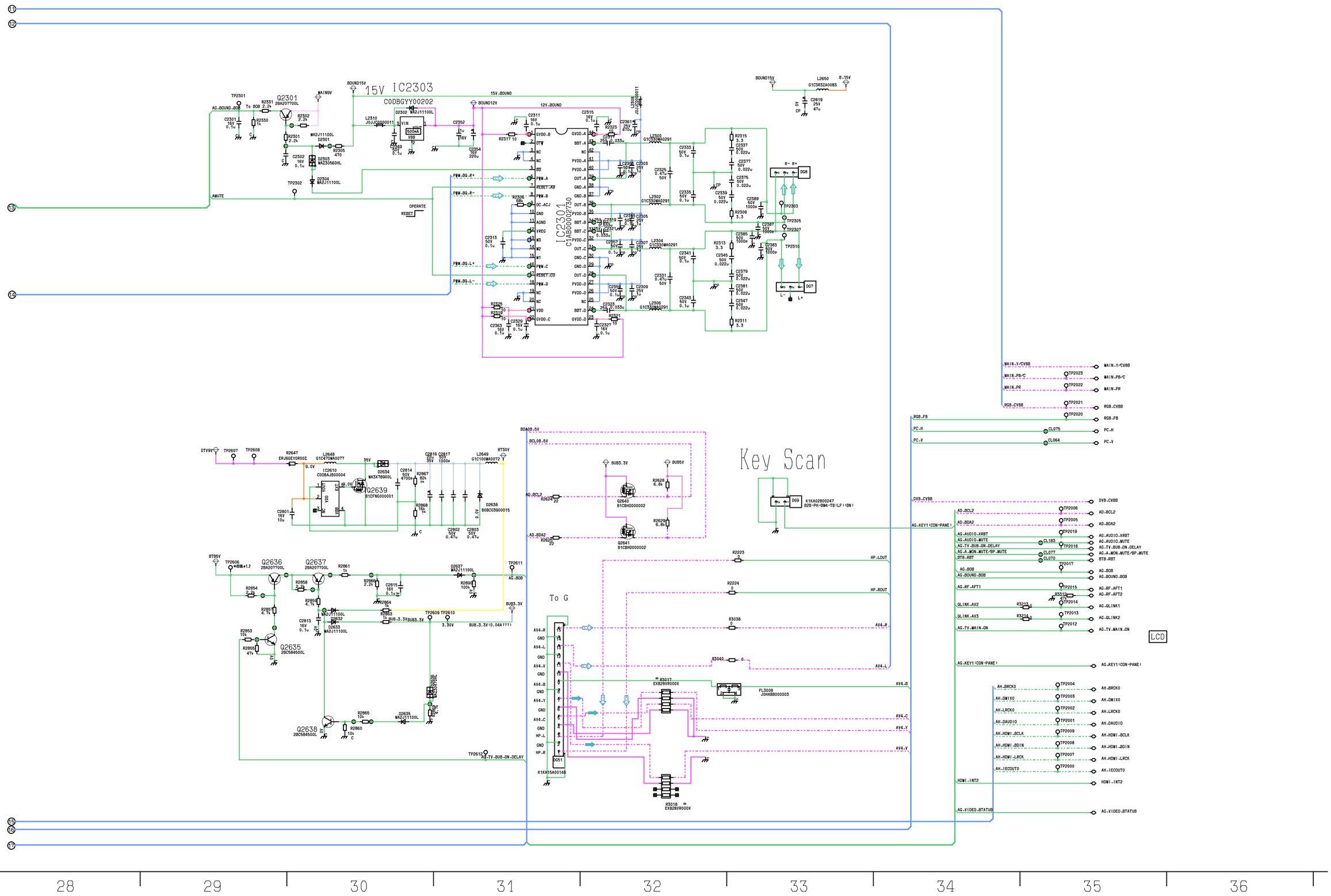

⚠ DG-BOARD TNP8EDG81 17/17

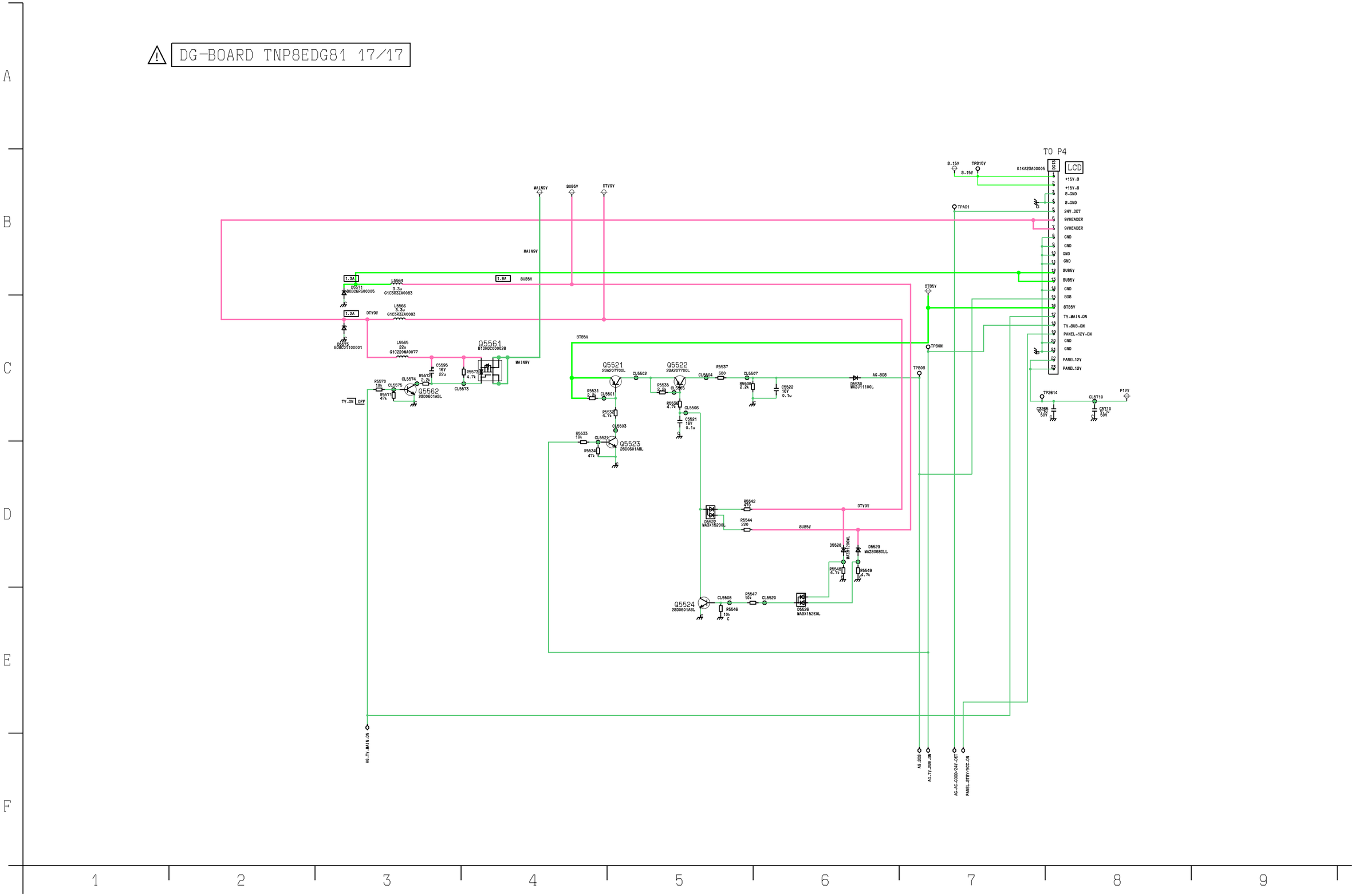

G-BOARD TNP8EGL80

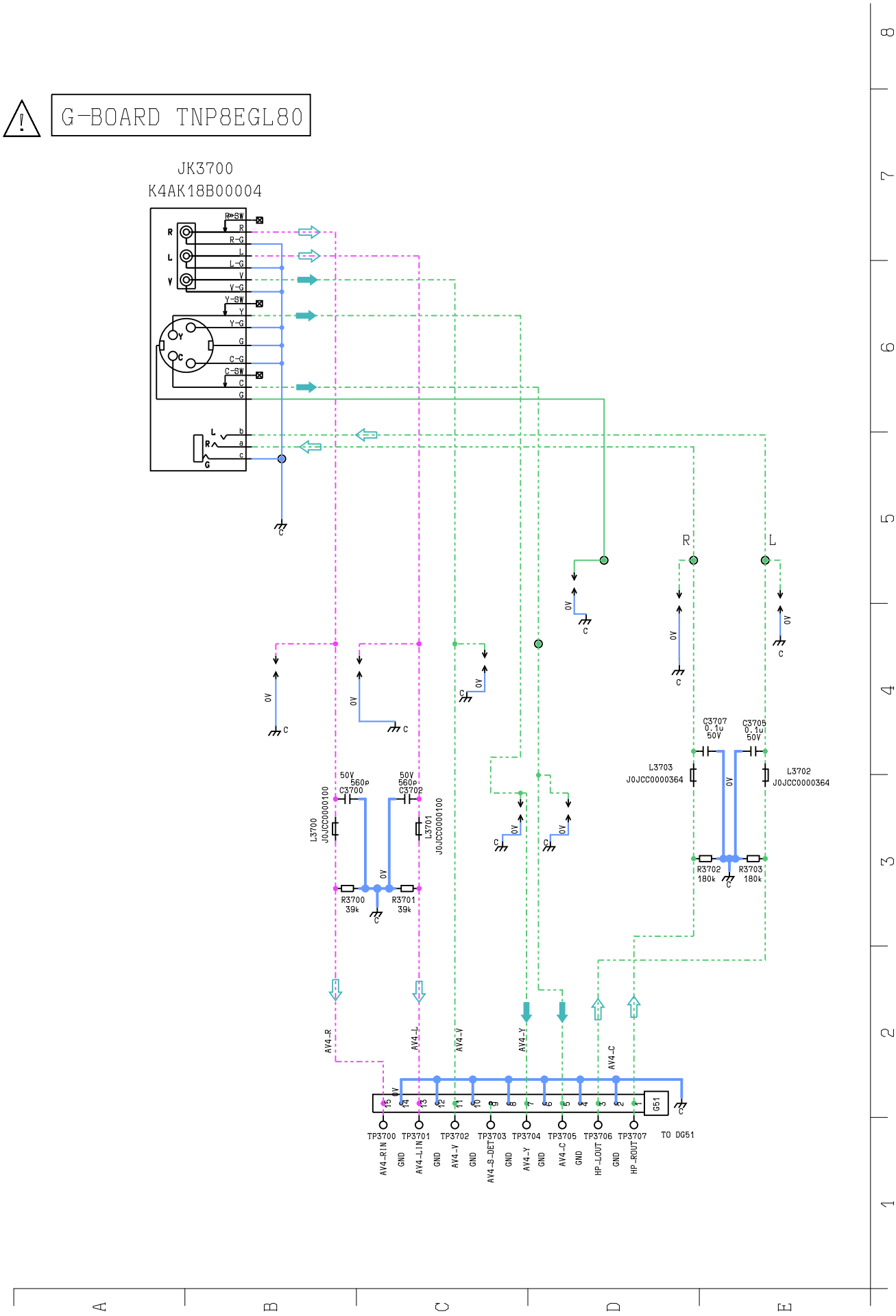

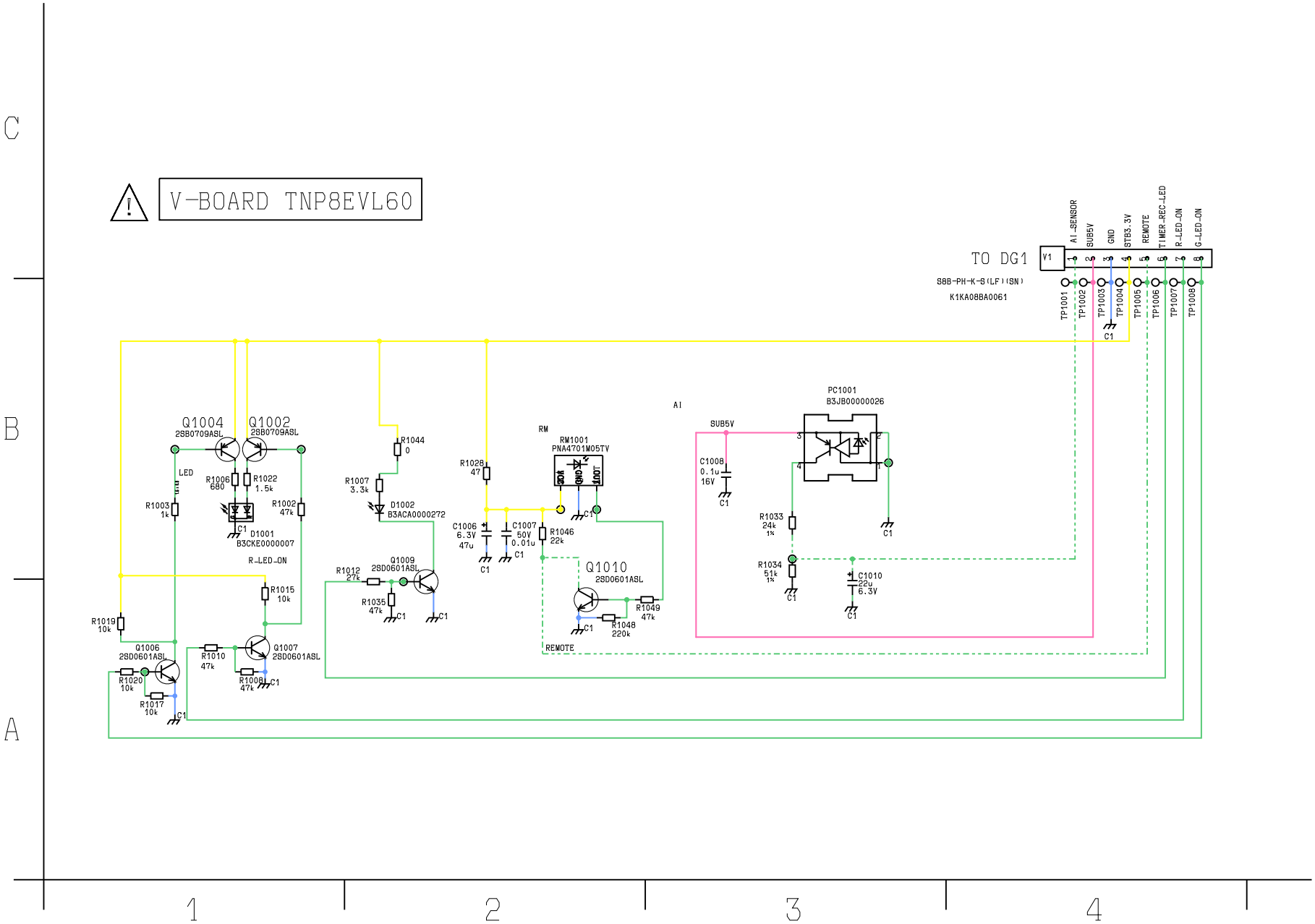
V-BOARD TNP8EVL60
TO DG1
V1
S8B-PH-K-S(LF)(SN)
K1KA08BA0061
AI_SENSOR
SUB5V
GND
STB3.3V
REMOTE
TIMER_REC_LED
R_LED_ON
G_LED_ON
TP1001
TP1002
TP1003
TP1004
TP1005
TP1006
TP1007
TP1008
Q1004
2SB0709ASL
Q1002
2SB0709ASL
LED
R1006
680
R1022
1.5k
R1003
1k
R1002
47k
D1001
B3CKE0000007
R_LED_ON
R1015
10k
R1019
10k
Q1006
2SD0601ASL
R1020
10k
R1017
10k
R1010
47k
Q1007
2SD0601ASL
R1008
47k
R1044
0
R1007
3.3k
D1002
B3ACA0000272
Q1009
2SD0601ASL
R1012
27k
R1035
47k
R1028
47
C1006
6.3V
47u
C1007
50V
0.01u
R1046
22k
RM
RM1001
PNA4701M05TV
Q1010
2SD0601ASL
R1049
47k
R1048
220k
REMOTE
AI
SUB5V
C1008
0.1u
16V
PC1001
B3JB00000026
R1033
24k
1%
R1034
51k
1%
C1010
22u
6.3V
C1

Conductor Views

DG-BOARD TNP8EDG81 - top

TRAN'S		IC1101	B4	D3027	B2
Q2002	A2	IC2008	D2	D3028	B2
Q2003	A2	IC2012	B1	D3030	A2
Q2004	A2	IC2106	E2	D3031	C2
Q2005	A2	IC2107	E3	D3032	C2
Q2006	A2	IC2301	C1	D3038	C2
Q2007	A2	IC3001	C2	D3044	C2
Q2031	A5	IC4500	C4	D3100	A2
Q2635	A5	IC4501	C3	D3102	B3
Q2638	A5	IC4506	D3	D3334	A3
Q3027	C2	IC4510	C4	D3335	A3
Q3031	C2	IC4800	A7	D3336	B3
Q3032	C2	IC5660	D4	D3337	B3
Q4200	D1	IC8001	D5	D3338	B3
Q4201	D1	IC8002	E5	D4500	C4
Q4501	C3	IC8003	E5	D4501	C3
Q4514	C2	IC8302	C6	D4502	C4
Q4515	C2	IC8403	D6	D4503	C3
Q4516	C3	IC8554	B5	D4504	C4
Q4517	C3	IC8601	B4	D4505	C3
Q4519	C3	IC8621	C5	D4506	C4
Q4800	D1	IC8622	C5	D4507	C3
Q4801	D1			D4508	C4
Q4802	D1	DIODE'S		D4509	C3
Q4803	D1	D1100	A6	D4510	C4
Q5521	B6	D1102	B6	D4511	C3
Q5561	E7	D1107	B5	D4514	C4
Q5562	E7	D1112	A5	D4516	C3
Q5600	E6	D2119	C2	D4519	C4
Q5601	E6	D2189	B1	D4521	C3
Q5602	E6	D2635	A4	D4522	C4
Q5603	E5	D2636	A5	D4523	C3
Q5604	D5	D2637	A5	D4532	C4
Q5690	D4	D3003	B2	D4800	D1
Q5691	D4	D3004	B2	D5528	B6
Q5692	D3	D3008	C2	D5529	B6
Q5693	D4	D3009	C3	D5571	E6
Q8401	D6	D3010	B3	D5573	E7
Q8402	D6	D3011	A3	D5601	E6
		D3012	A3	D5602	E6
IC'S		D3013	B3	D5605	D6
IC1100	A5	D3014	B2	D8901	C4

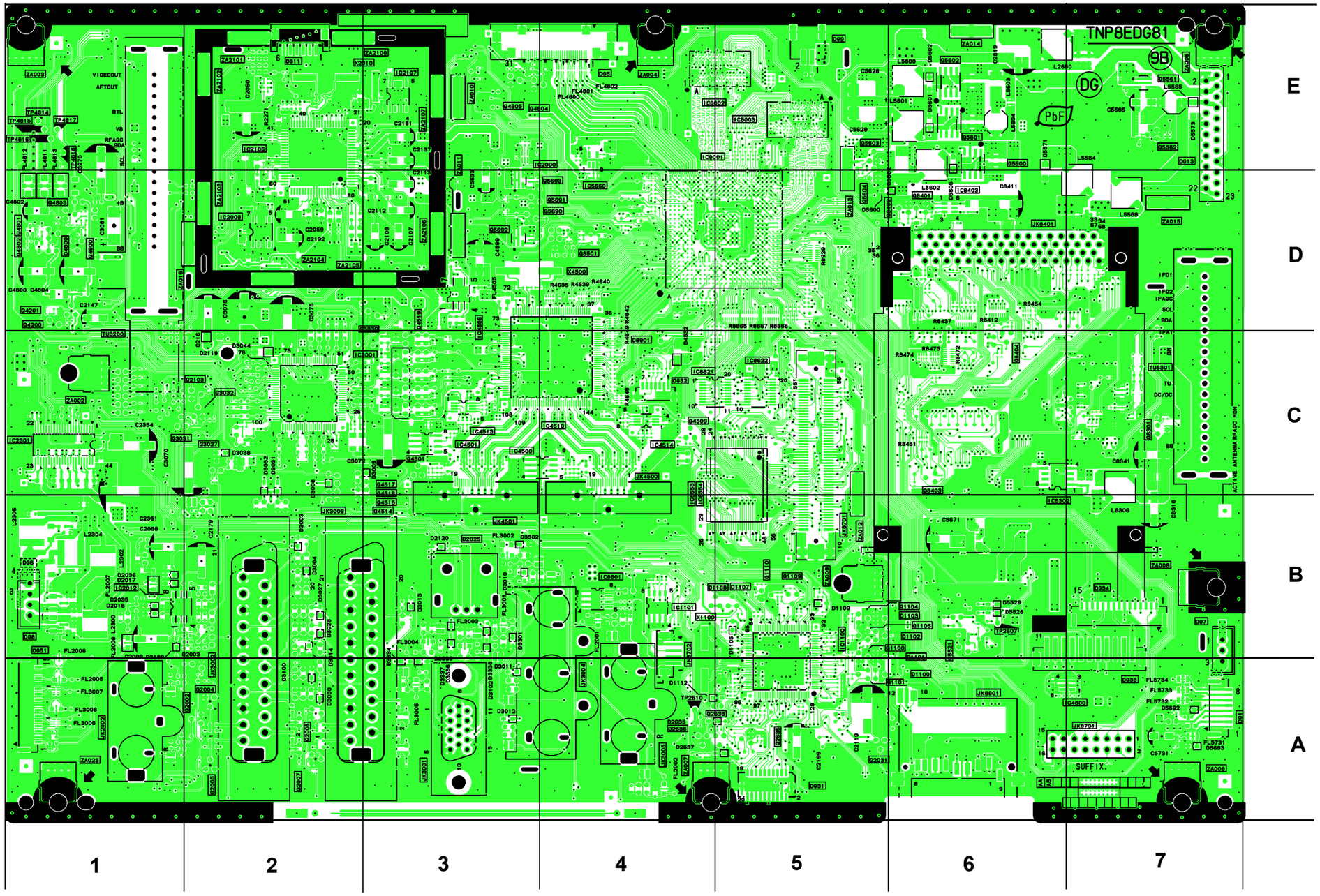

DG-BOARD TNP8EDG81 - bottom

IC'S		Q2040	A5	D3039	C3
IC2002	E2	Q2041	A5	D3041	C2
IC2006	E2	Q2101	E2	D3042	C2
IC2010	D3	Q2102	E2	D3043	C2
IC2011	D2	Q2301	C1	D4512	B4
IC2013	B2	Q2636	A5	D4513	C4
IC2303	C1	Q2637	A4	D4515	C3
IC2610	E1	Q2639	E1	D4517	B3
IC3101	C1	Q2640	D3	D4518	C4
IC4504	C4	Q2641	D3	D4520	B3
IC4507	C4	Q3028	C3	D4524	C4
IC4508	D3	Q3200	E1	D4525	C4
IC4509	E3	Q4500	C3	D4526	C3
IC4515	D3	Q4502	C4	D4527	C3
IC5600	D6	Q4503	C3	D4528	B4
IC5601	E6	Q4504	C3	D5522	B6
IC5670	B6	Q4505	B3	D5526	B6
IC5671	B6	Q5522	B6	D5530	B6
IC8004	E4	Q5523	B6	D5603	E6
IC8301	C7	Q5524	B6	D5604	E6
IC8401	C6			D5606	D6
IC8402	C6	**DIODE'S**		D5607	D6
IC8404	C6	D2026	A5	D5608	E5
IC8405	C6	D2028	A6	D5609	D5
IC8406	C6	D2029	A6	D5670	B6
IC8407	C6	D2031	A5	D5671	B6
IC8408	C6	D2032	A5	D5672	B6
IC8409	C6	D2033	A5	D5673	B6
		D2034	A5	D5690	D3
TRAN'S		D2200	B1	D5691	E3
Q1107	B4	D2301	C1	D8902	A6
Q1108	A4	D2302	C1	D8903	A6
Q2015	D1	D2303	C1	D8904	A6
Q2016	D2	D2304	C1	D8905	A6
Q2017	D2	D2632	E1	D8906	A6
Q2021	D1	D2633	A5	D8907	A6
Q2033	A5	D2634	E1	D8908	A6
Q2034	A6	D2638	E1	D8909	A6
Q2035	A6	D3005	C2		
Q2039	A5	D3025	B2		

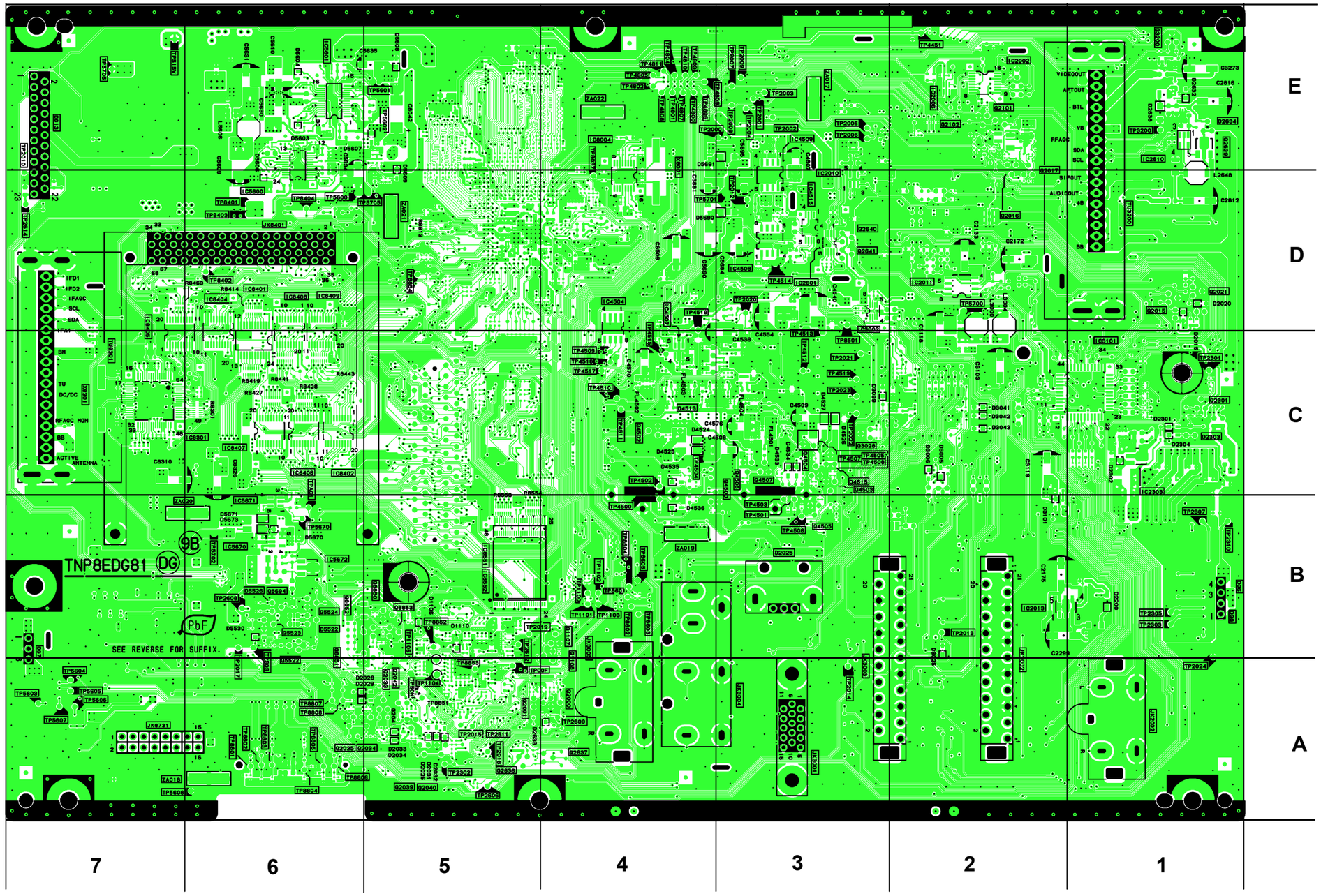

P-BOARD TNP8EPL80 - top

IC'S	
IC801	A6
IC802	B4
IC3850	D5
IC3851	F6
IC3852	F5
IC3853	D6
DIODE'S	
D801	A7
D802	D8
D804	A6
D807	A6
D810	A2
D814	C5
D816	A3
D818	A5
D828	B4
D829	A6
D830	A6
D851	D3
D854	D2
TRAN'S	
Q812	B5
Q3850	E2

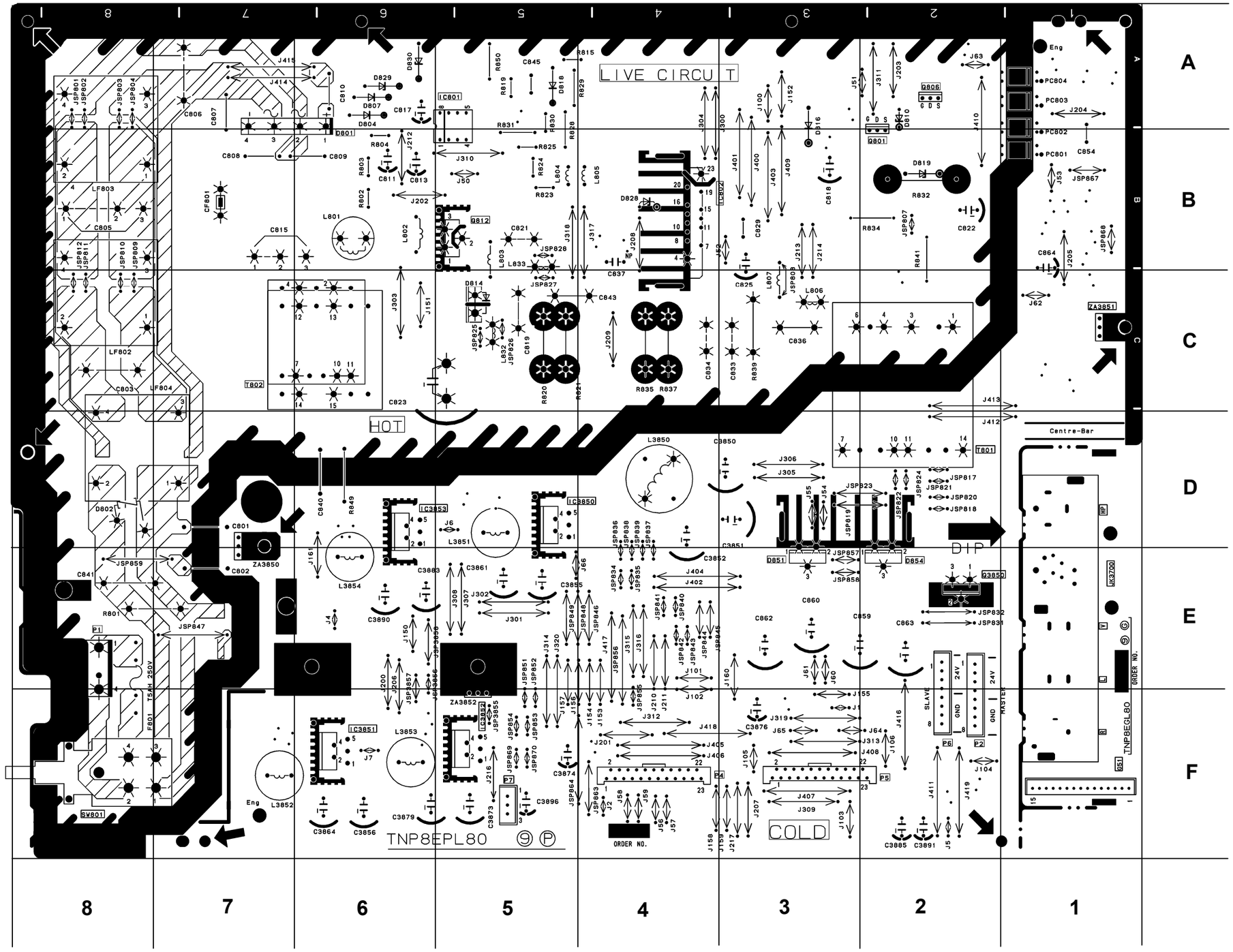

P-BOARD TNP8EPL80 - bottom

IC'S		TRAN'S	
IC851	B1	Q3852	A1
IC3854	F2	Q3853	A1
IC3855	F5	Q3854	A1
		Q3855	B1
DIODE'S		Q3856	B1
D803	A3	Q3857	D5
D805	A5	Q3858	F7
D806	B6	Q3859	D6
D808	B6	Q3860	F7
D809	B2	Q3863	F2
D811	B5	Q3864	F2
D813	A2	Q3865	E3
D817	B2	Q3866	F6
D820	B4	Q3867	F6
D821	B2	Q3868	D6
D822	B3	Q3869	D7
D823	B2	Q3870	B1
D824	B2	Q3871	B1
D826	B2	Q802	B2
D827	B4	Q803	B3
D831	A5	Q804	A3
D852	B1	Q805	B2
D853	B1	Q807	A5
D856	C1	Q808	B4
D858	C1	Q809	C2
D859	C1	Q810	B4
D861	D2	Q811	D4
D3850	F2	Q813	A2
D3852	F4	Q851	B1
D3853	F3	Q852	B1
D3854	F4	Q853	C1
D3855	F3	Q854	C1
D3856	D5		
D3857	F6	**TP'S**	
D3858	E5	TP836	C5
D3859	F6	TP852	E3
D3860	F3	TP853	E2
D3862	F6	TP854	B1
D3863	E4	TP855	C1
D3864	F5	TP856	E5
D3865	F3	TP857	F7
D3866	F4	TP858	F5
D3867	F4	TP859	F3
D3868	E6	TP860	F5
D3869	F2	TP861	F6
D3870	D6	TP862	F2
D3871	F2	TP863	F2
D3872	F5	TP864	E6

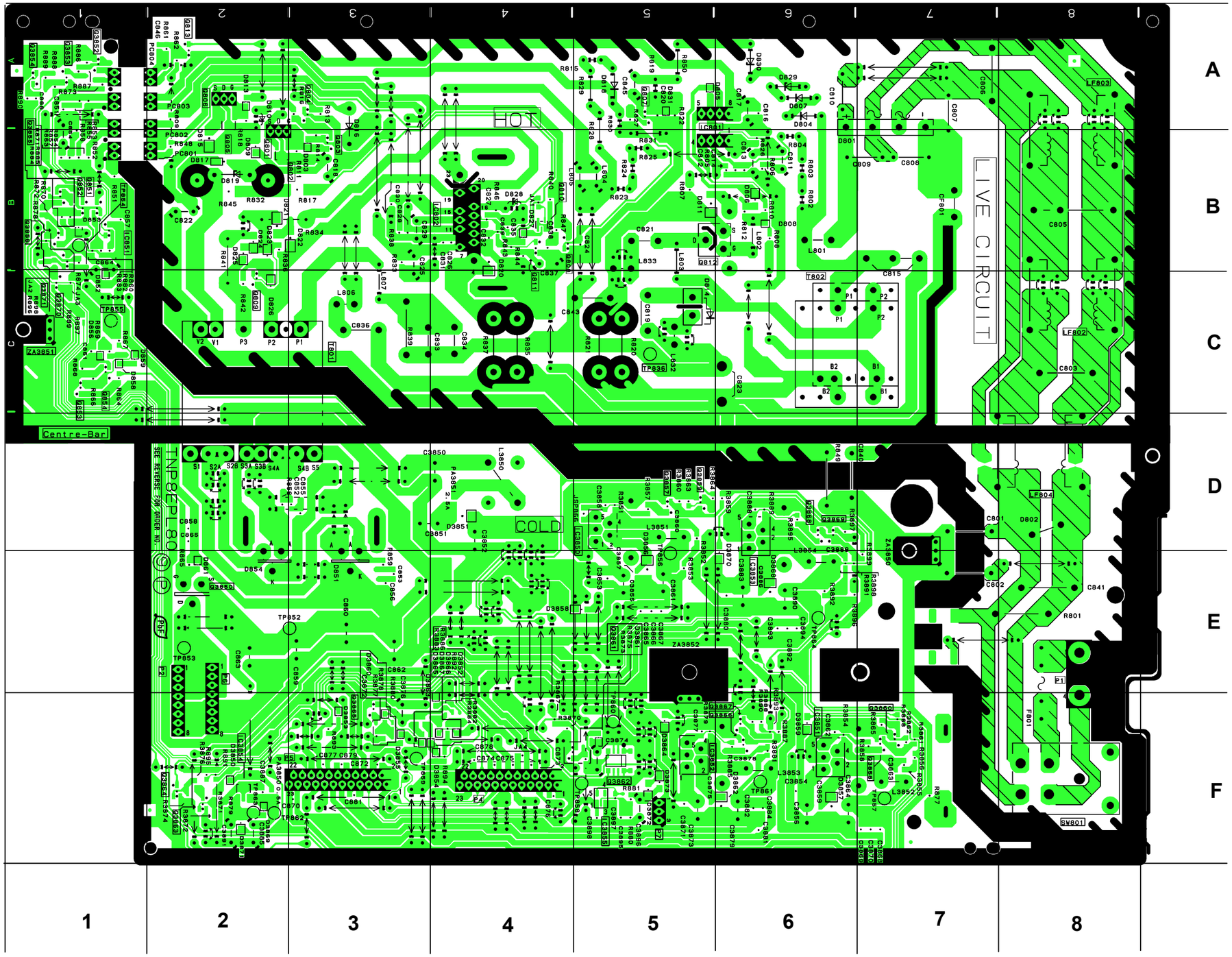

V-BOARD TNP8EVL60 - top

TRAN'S	
Q1002	A1
Q1004	A1
Q1006	A1
Q1007	A1
Q1009	A1
Q1010	A2
DIODE'S	
D1001	A1
D1002	A1
IC'S	
RM1001	A2
PC1001	A2

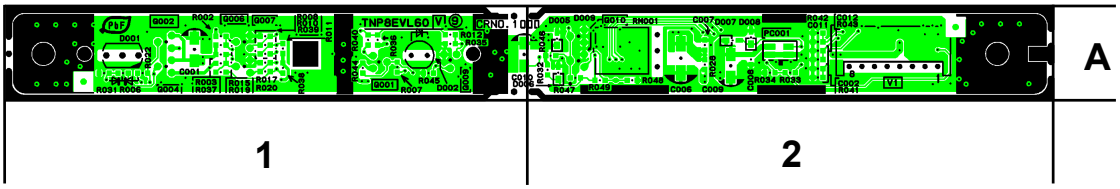

V-BOARD TNP8EVL60 - bottom
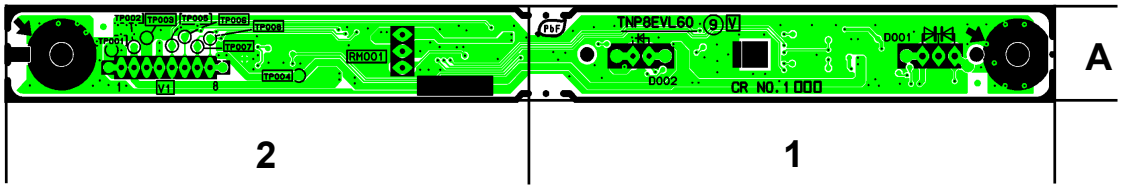
TP'S	
TP1001	A2
TP1002	A2
TP1003	A2
TP1004	A2
TP1005	A2
TP1006	A2
TP1007	A2
TP1008	A2